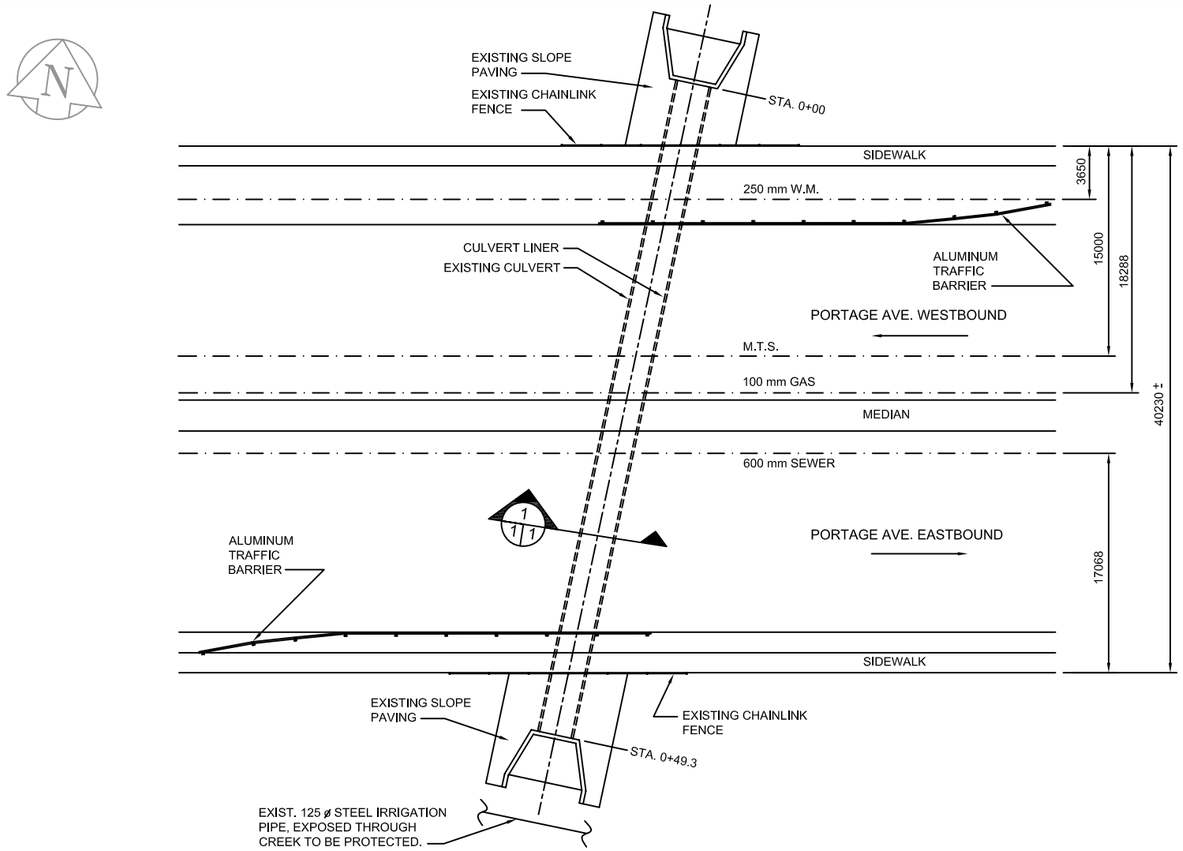

SITE PLAN
N.T.S.

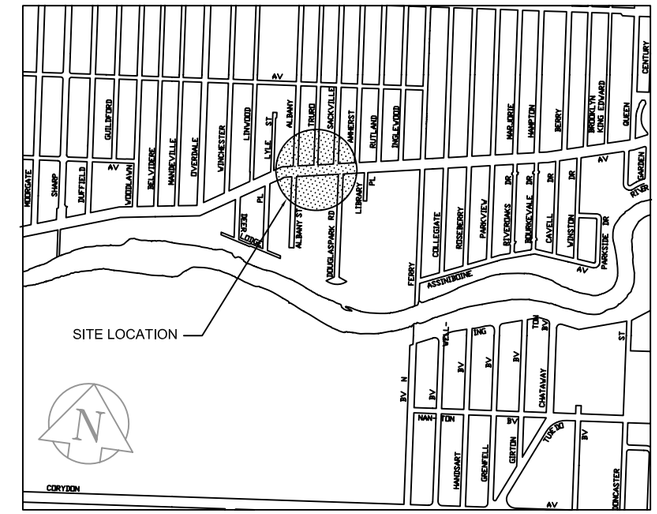

LOCATION PLAN

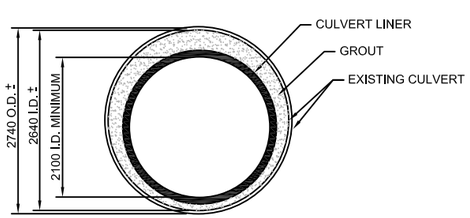

1 / 1 1 SECTION
N.T.S.

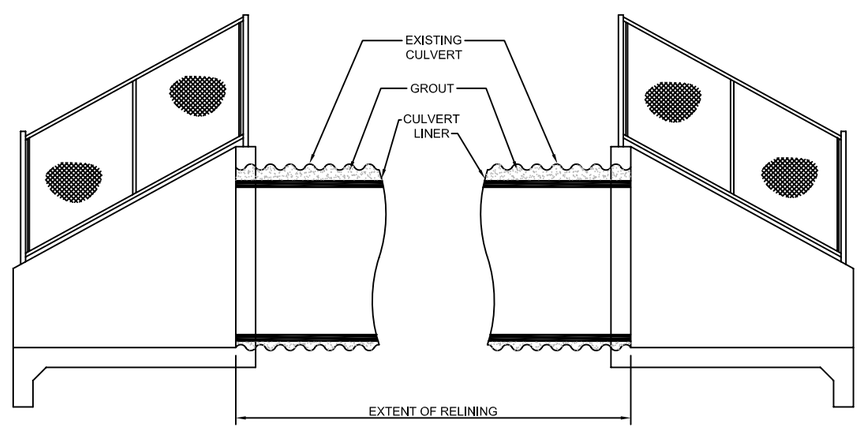

WINGWALL & CULVERT ELEVATION
N.T.S.

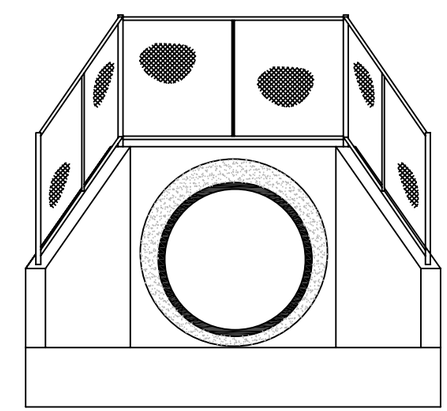

END ELEVATION
N.T.S.

METRIC
WHOLE NUMBERS INDICATE MILLIMETRES
DECIMALIZED NUMBERS INDICATE METRES

LOCATION APPROVED
UNDERGROUND STRUCTURES

SUPR. U/G STRUCTURES DATE

NOTE:

LOCATION OF UNDERGROUND STRUCTURES AS SHOWN ARE BASED ON THE BEST INFORMATION AVAILABLE BUT NO GUARANTEE IS GIVEN THAT ALL EXISTING UTILITIES ARE SHOWN OR THAT THE GIVEN LOCATIONS ARE EXACT. cONFIRMATION OF EXISTENCE AND EXACT LOCATION OF ALL SERVICES MUST BE OBTAINED FROM THE INDIVIDUAL UTILITIES BEFORE PROCEEDING WITH CONSTRUCTION.

B.M
ELEV.

NO.	REVISION	DATE	BY
0	ISSUED FOR TENDER	25/11/10	M.T.

DESIGNED BY: D.N.B.
DRAWN BY: M.R.T.
CHECKED BY: D.N.B.
APPROVED BY: D.N.B.
AUTHORIZED BY:

ORIGINAL SIGNED BY D.N. BURMEY
D.N. BURMEY
BRIDGE MAINTENANCE ENGINEER

ENGINEER'S SEAL
PROVINCE OF MANITOBA
ORIGINAL SIGNED BY:
D.N. BURMEY
2010/11/25
REGISTERED PROFESSIONAL ENGINEER

BID OPPORTUNITY NO.:
882-2010

Winnipeg
CITY OF WINNIPEG
PUBLIC WORKS DEPARTMENT
ENGINEERING DIVISION

PORTAGE AVENUE AT TRURO CREEK
CULVERT RELINING

PLANS, ELEVATIONS & SECTIONS

SHEET 1 OF 2
HORIZONTAL: N.T.S.
VERTICAL: N.T.S.
CITY DRAWING NUMBER:
C307-10-01