A1 SIZE - 594mm x 841mm

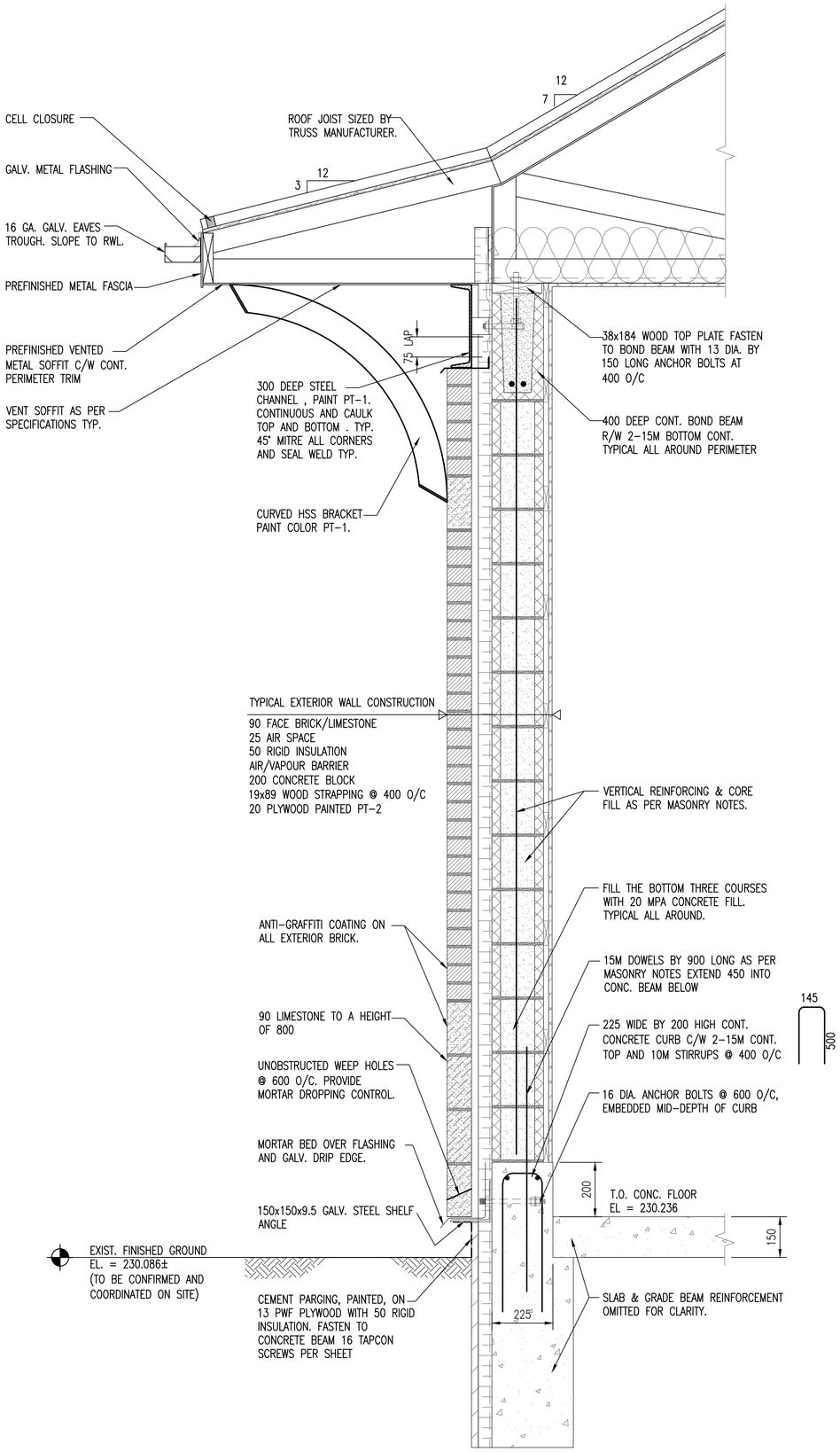

1 -- TYPICAL WALL SECTION
SCALE: 1 : 10

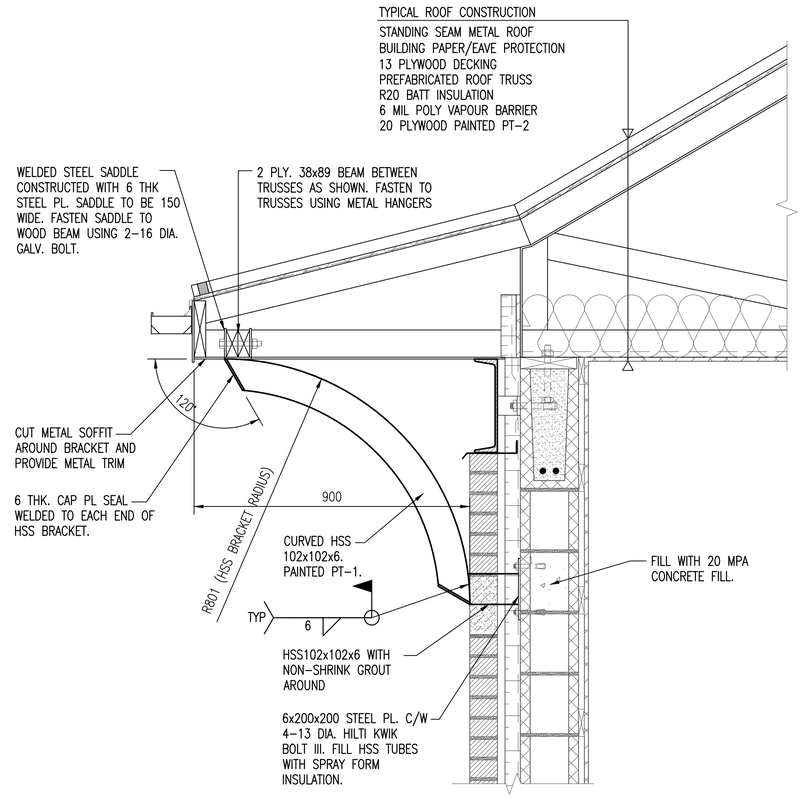

2 -- HSS BRACKET SECTION
SCALE: 1 : 10

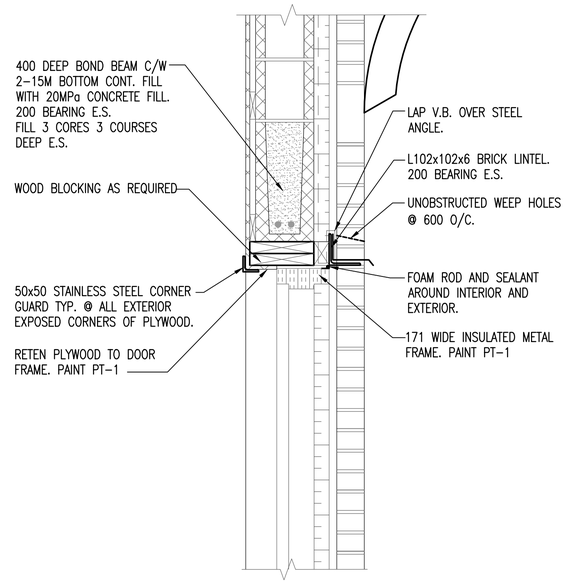

3 -- LINTEL DETAIL
SCALE: 1 : 10

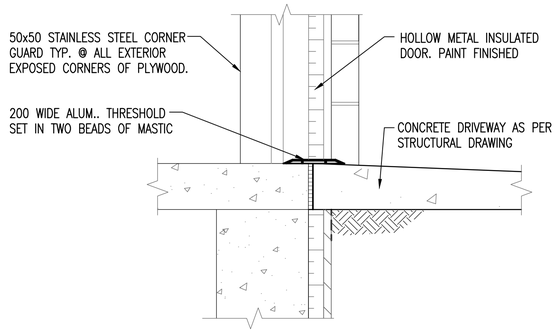

4 -- THRESHOLD DETAIL
SCALE: 1 : 10

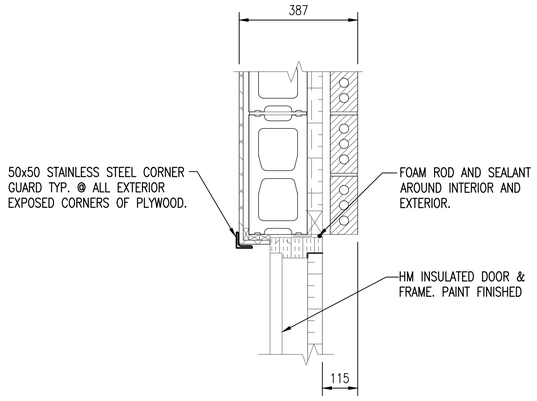

5 -- JAMB DETAIL
SCALE: 1 : 10

1:10 100 0 100 300 500

APEGM Certificate of Authorization
SNC-Lavalin Inc.
No. 4489

NO.	REVISIONS	DATE	DESIGN	CHECK
00	ISSUED FOR TENDER	2010/10/01	AD	NC

SNC·LAVALIN
SNC-LAVALIN INC.
148 Nature Park Way
Winnipeg, MB, Canada R3P 0X7
204-786-8080

DESIGNED BY: A. DEGER	CHECKED BY: N. COOPER
DRAWN BY: L. GAO	APPROVED BY: C. REIMER
SCALE: 1:10	RELEASED FOR CONSTRUCTION BY: K. ZUREK
DATE: 2010/07/07	DATE: 2010/10/04
CONSULTANT NO.: 113368-0000-44DD-0005	BID OPP.: 760-2010

ENGINEER'S SEAL
ORIGINAL DRAWING SEALED BY:
NEIL COOPER
2010/10/01
REV. 00

Winnipeg THE CITY OF WINNIPEG
WATER AND WASTE DEPARTMENT

MARION WASTEWATER PUMPING STATION
INSTALLATION OF PUMPING UNITS & BUILDING UPGRADES
SECTIONS & DETAILS
TYPICAL

CITY DRAWING NUMBER	SHEET	REV.	SIZE
1-0159L-B0005	001	00	A1

1-0159L-B0005-001-00.dwg

LAST SAVE: 2010/10/04 - 1:07pm
PATH: M:\113368\ENG\42STR\DD - General DWG\1-0159L-B0005-001-00.dwg