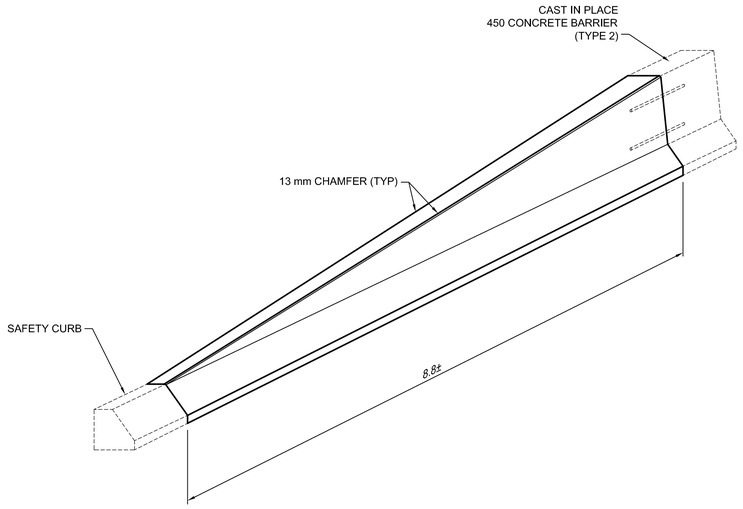

1 / 35 56 BARRIER TRANSITION DETAIL
SCALE 1:25

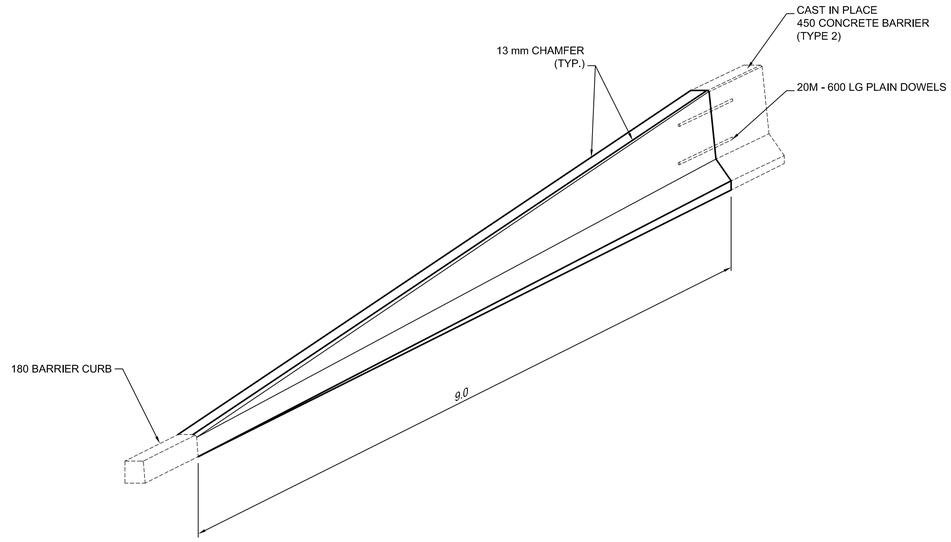

2 / 41 56 BARRIER TRANSITION DETAIL
SCALE 1:25

APEGM
Certificate of Authorization
Dillon Consulting Limited (MB)
No. 1789 Date: _____

LOCATION UNDERGROUND STRUCTURES APPROVED

SUPV. U/G STRUCTURES COMMITTEE _____ DATE _____

NOTE:
LOCATION OF UNDERGROUND STRUCTURES AS SHOWN ARE BASED ON THE BEST INFORMATION AVAILABLE, BUT NO GUARANTEE IS GIVEN THAT ALL EXISTING UTILITIES ARE SHOWN OR THAT THE GIVEN LOCATIONS ARE EXACT. CONFIRMATION OF EXISTENCE AND EXACT LOCATION OF ALL SERVICES MUST BE OBTAINED FROM THE INDIVIDUAL UTILITIES BEFORE PROCEEDING WITH CONSTRUCTION.

B.M. ELEV.

NO.	REVISIONS	DATE	BY
2	ISSUED FOR TENDER	03/26/10	TJP
1	ISSUED FOR 75% REVIEW	03/03/10	TJP

DESIGNED BY	RTP
DRAWN BY	TJH/RTP
CHECKED BY	ORIGINAL SIGNED BY TARAN J. PETERS
APPROVED BY	ORIGINAL SIGNED BY DAVE P. KRAHN
HOR. SCALE	AS NOTED
VERTICAL	AS NOTED
DATE	03/26/10

DILLON CONSULTING

RELEASED FOR CONSTRUCTION
ORIGINAL SIGNED BY RANDY FINGAS
DATE 03/24/10

ENGINEER'S SEAL
PROVINCE OF MANITOBA
ORIGINAL STAMPED BY
T.J. PETERS
03/26/10
Member 22309
REGISTERED PROFESSIONAL ENGINEER

CONSULTANT PROJECT NO.
088813

Winnipeg
THE CITY OF WINNIPEG
TRANSIT DEPARTMENT

SOUTHWEST RAPID TRANSIT CORRIDOR - STAGE 1
TRANSITWAY CONSTRUCTION, LANDSCAPING & ASSOCIATED WORKS

CURB-BARRIER TRANSITIONS

CITY DRAWING NUMBER P-3317-56
SHEET 56 OF 72
CONSULTANT DRAWING NUMBER C6-C3046-T

G:\CAD\088813\Contract\Contract 6-Busway\Current\Roadway\C6-350-Details-from-C3.dwg