DETAIL

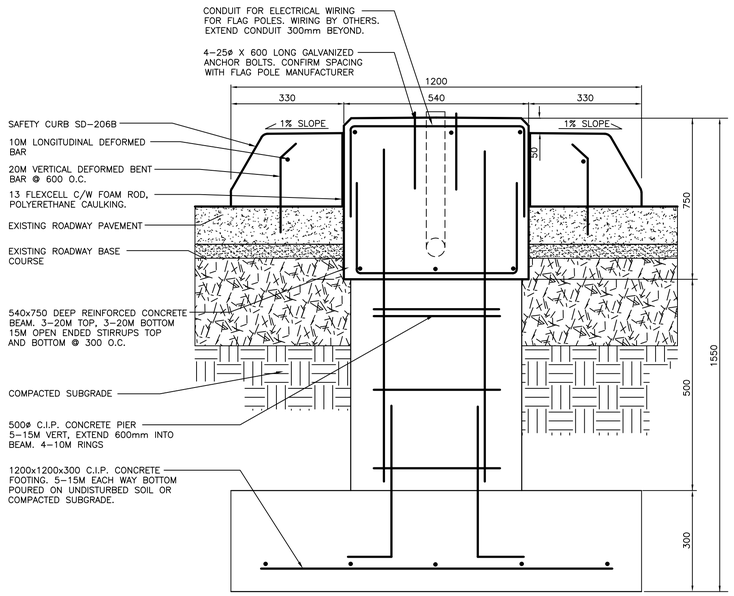

SECTION A–A

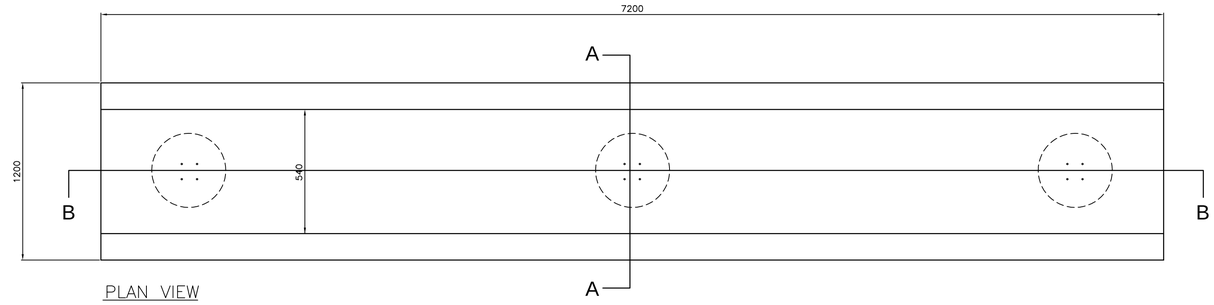

PLAN VIEW

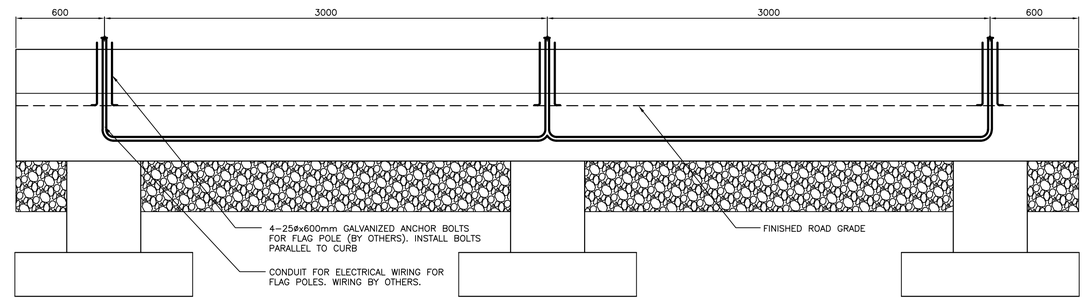

SECTION B–B

1 MEDIAN GRADE BEAM
L1 N.T.S.

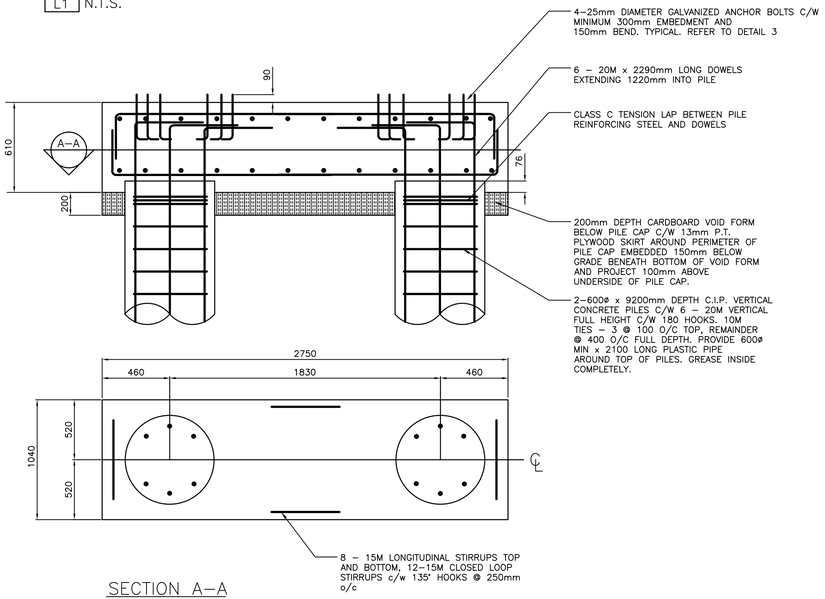

SECTION A–A

2 CONCRETE FOUNDATION FOR ARCHWAY
L1 N.T.S.

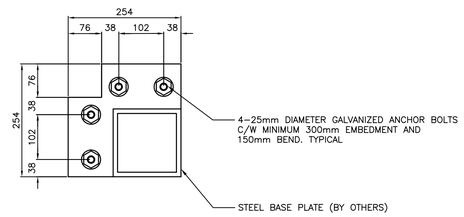

DETAIL

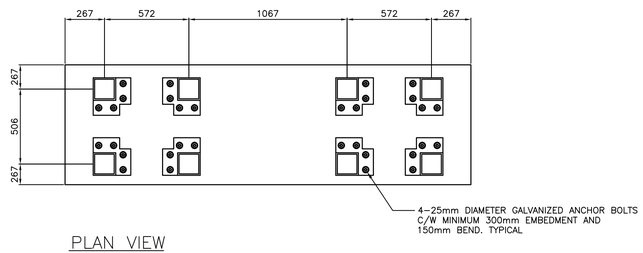

PLAN VIEW

3 ANCHOR BOLTS FOR ARCHWAY
L1 N.T.S.

GENERAL NOTES:

1. ALL RELEVANT CSA CODES, PROVINCIAL BUILDING CODE, WORKMAN'S COMPENSATION BOARD, AND LOCAL BY–LAWS SHALL APPLY TO ALL WORK PERFORMED FOR THIS PROJECT.
2. ALL DIMENSIONS SHOWN IN METRIC UNITS. NUMBERS WITH DECIMALS INDICATE METERS. WHOLE NUMBERS INDICATE MILLIMETERS.
3. REFER ALSO TO WRITTEN SPECIFICATIONS.
4. THE CONTRACTOR SHALL BE RESPONSIBLE FOR THE DESIGN, INSTALLATION AND SAFETY OF ALL TEMPORARY SHORING, BRACING, FORM WORK AND SCAFFOLDING WORK IN THIS PROJECT. ALL COSTS SHALL BE INCIDENTAL TO THE WORK.
5. THE GENERAL CONTRACTOR SHALL VERIFY ALL DIMENSIONS AND ELEVATIONS SHOWN ON THE DRAWINGS PRIOR TO CONSTRUCTION AND SHALL NOTIFY THE CONTRACT ADMINISTRATOR OF ANY DISCREPANCIES.
6. THE CONTRACTOR SHALL VERIFY AND PAY SPECIAL ATTENTION TO THE VERTICAL AND HORIZONTAL ALIGNMENTS OF THE STRUCTURE.
7. THE CONTRACTOR SHALL PROVIDE SHOP DRAWINGS SIGNED BY A STRUCTURAL ENGINEER LICENSED TO PRACTICE IN THE PROVINCE OF MANITOBA (IN GOOD STANDING).
8. THE CONTRACTOR SHALL ENSURE ALL MATERIALS ARE INSTALLED IN STRICT ACCORDANCE WITH MANUFACTURER'S SPECIFICATIONS.
9. ALL UTILITIES ARE SHOWN AS INFORMATION ONLY. CONTRACTOR TO CONFIRM LOCATION OF ALL UTILITIES ON SITE PRIOR TO CONSTRUCTION.
10. CONTRACTOR TO PROTECT ALL TREES, POLES, AREAWAYS ETC. TO REMAIN TO CITY OF WINNIPEG STANDARDS.
11. CONFIRM ALL DIMENSIONS ON SITE. LAYOUT TO BE APPROVED BY CONTRACT ADMINISTRATOR PRIOR TO ANY EXCAVATION OR CONSTRUCTION. REPORT ANY DISCREPANCIES.
12. ALL EXPOSED CONCRETE EDGES TO HAVE A MIN. 20x20mm CHAMFER UNLESS OTHERWISE NOTED.
13. REFER TO STRUCTURAL DRAWINGS (UNDER SEPARATE CONTRACT) FOR ALL DESIGN DATA, LOADING DATA, AND DESIGN CODES FOR STEEL ARCHWAY.

METRIC
WHOLE NUMBERS INDICATE MILLIMETRES
DECIMALIZED NUMBERS INDICATE METRES

BID OPPORTUNITY NO. 227–2010

LOCATION APPROVED
UNDERGROUND STRUCTURES

SUPR. U/G STRUCTURES COMMITTEE — DATE

NOTE:
LOCATION OF UNDERGROUND STRUCTURES AS SHOWN ARE BASED ON THE BEST INFORMATION AVAILABLE. BUT NO GUARANTEE IS GIVEN THAT ALL EXISTING UTILITIES ARE SHOWN OR THAT THE GIVEN LOCATIONS ARE EXACT. CONFIRMATION OF EXISTENCE AND EXACT LOCATION OF ALL SERVICES MUST BE OBTAINED FROM THE INDIVIDUAL UTILITIES BEFORE PROCEEDING WITH CONSTRUCTION.

B.M. GBM 30–054
ELEV. 233.551

NO.	REVISIONS	DATE	BY

ENGINEERING DIVISION
TECHNOLOGY SERVICES BRANCH
106 - 1155 PACIFIC AVE

DESIGNED BY	T.M.	CHECKED BY	T.M.
DRAWN BY	A.H.	APPROVED BY	
HOR. SCALE:	AS NOTED		
VERTICAL:	–		
DATE	2010/04/29		

ENGINEER'S SEAL
ORIGINAL
SEALED AND SIGNED BY
T.K. MALKIEWICZ, P.ENG.

Winnipeg

THE CITY OF WINNIPEG
PUBLIC WORKS DEPARTMENT

REGENT AVENUE WEST
FROM **WINONA STREET** TO **DAY STREET**
ASPHALT RESURFACING, STREETSCAPING AND ASSOCIATED WORKS
STRUCTURAL DETAILS

CITY DRAWING NUMBER
SE–10–32
SHEET 7 OF 7
7