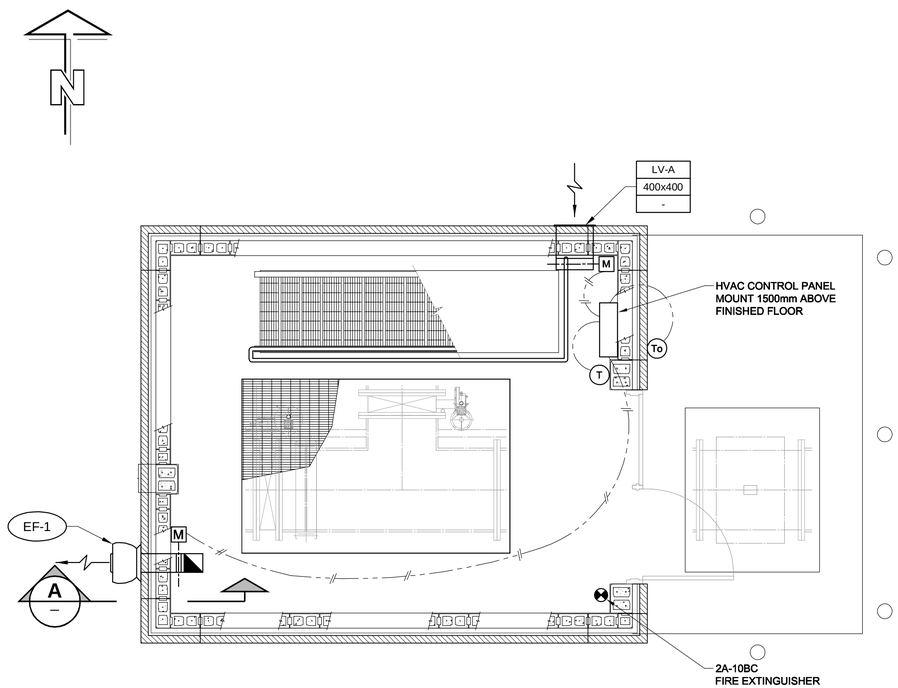

PLAN - UPPER LEVEL

mm SCALE 1:40
0 400 800 1200

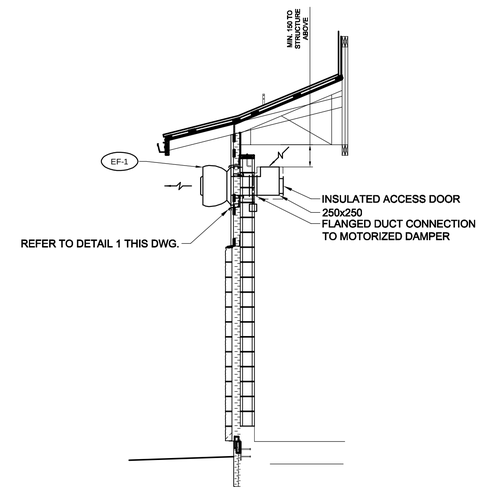

SECTION A –

mm SCALE 1:40
0 400 800 1200

LEGEND

- M — MOTORIZED DAMPER
- FIRE EXTINGUISHER
- CONTROL WIRING
- LINE VOLTAGE WIRING
- T — THERMOSTAT
- To — OUTDOOR AIR TEMPERATURE SENSOR

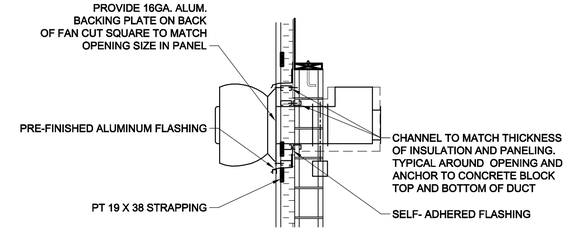

DETAIL 1 –

SCALE: NTS

BID OPPORTUNITY NO. 16-2010

Certificate of Authorization
AECOM Canada Ltd.
No. 4671 Date:_____

LOCATION APPROVED
UNDERGROUND STRUCTURES
SUPR. U/G STRUCTURES COMMITTEE DATE

NOTE:
LOCATION OF UNDERGROUND STRUCTURES AS SHOWN ARE BASED ON THE BEST INFORMATION AVAILABLE. BUT NO GUARANTEE IS GIVEN THAT ALL EXISTING UTILITIES ARE SHOWN OR THAT THE GIVEN LOCATIONS ARE EXACT. CONFIRMATION OF EXISTENCE AND EXACT LOCATION OF ALL SERVICES MUST BE OBTAINED FROM THE INDIVIDUAL UTILITIES BEFORE PROCEEDING WITH CONSTRUCTION.

NO.	REVISIONS	YY/MM/DD	BY
0	ISSUED FOR CONSTRUCTION	10/02/08	SCK

This drawing has been prepared for the use of AECOM's client and may not be used, reproduced or relied upon by third parties, except as agreed by AECOM and its client, as required by law or for use by governmental reviewing agencies. AECOM accepts no responsibility, and denies any liability whatsoever, to any party that modifies this drawing without AECOM's express written consent.
Do not scale this document. All measurements must be obtained from stated dimensions.

DESIGNED BY	JDB	CHECKED BY	LK
DRAWN BY	SK	APPROVED BY	BTW
HOR. SCALE	1:40	RELEASED FOR CONSTRUCTION	KZ
VERT. SCALE	-		
DATE	10/02/09	DATE	FEB. 9, 2010

PROFESSIONAL'S SEAL
REV. 0
ISSUED FOR CONSTRUCTION
WAS SEALED BY
C.A.D. COURCHAINE
AND DATED
FEB. 8, 2010

CONSULTANT DRAWING NO.
D265-250-00_01-M-0001_RX.dwg

Winnipeg

THE CITY OF WINNIPEG
WATER AND WASTE DEPARTMENT

BRANCH I AQUEDUCT VALVE CHAMBER AT McPHILLIPS STREET PUMPING STATION

MECHANICAL
UPPER LEVEL
-

SHEET 28 OF 28

CITY DRAWING NUMBER
D-11938
REV 0

AECOM REVIEW | DRFT CHK | KK

AECOM FILE NAME: D265-250-00_01-M-0001_RX.dwg Saved By: kowalsks

PLOT: 10/02/10 8:32:17 AM

D SIZE 22" x 34" (559mm x 864mm)