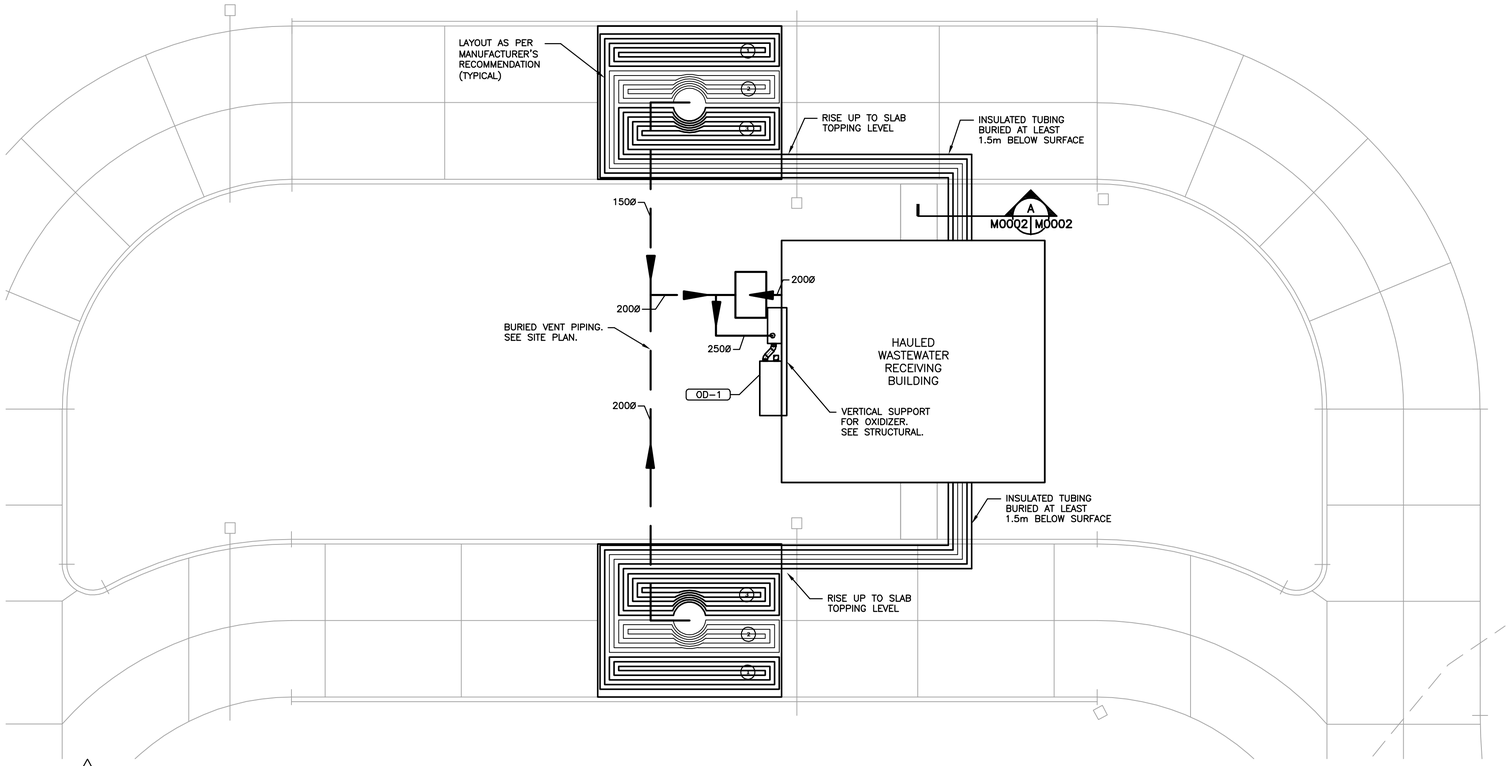

1 / M0002 MECHANICAL SITE PLAN
1:100

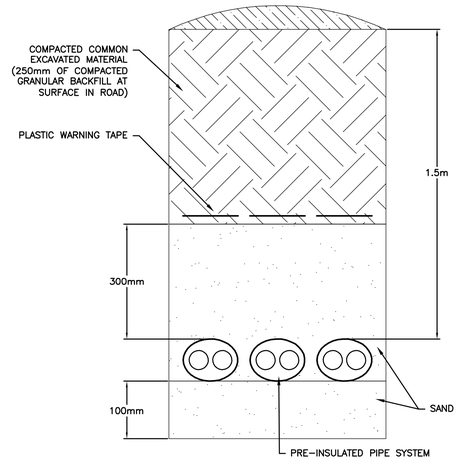

A / M0002 BURIED HYDRONIC PIPING
NTS

APEGM
Certificate of Authorization
Stantec Consulting Ltd.
No. 1301 Date:_____

LOCATION APPROVED
UNDERGROUND STRUCTURES

SUPV. U/G STRUCTURES COMMITTEE DATE

NOTE:
LOCATION OF UNDERGROUND STRUCTURES AS SHOWN ARE BASED ON THE BEST INFORMATION AVAILABLE BUT NO GUARANTEE IS GIVEN THAT ALL EXISTING UTILITIES ARE SHOWN OR THAT THE GIVEN LOCATIONS ARE EXACT. CONFIRMATION OF EXISTENCE AND EXACT LOCATION OF ALL SERVICES MUST BE OBTAINED FROM THE INDIVIDUAL UTILITIES BEFORE PROCEEDING WITH CONSTRUCTION.

B.M. ELEV.

NO.	REVISIONS	DATE	BY
A	ISSUED FOR TENDER	10.02.16	L.W.

Stantec Consulting Ltd.
905 Waverley Street, Winnipeg, Manitoba
Tel 204-489-5900 Fax 204-453-9012

DESIGNED BY	L.W.	CHECKED BY	A.B.
DRAWN BY	J.L.T.	APPROVED BY	A.B.
HOR. SCALE: VERTICAL:	AS NOTED	RELEASED FOR CONSTRUCTION:	
DATE	09.11.13	DATE	

ENGINEER'S SEAL

THE CITY OF WINNIPEG
WATER AND WASTE DEPARTMENT

SOUTH END WATER POLLUTION CONTROL CENTRE
HAULED WASTEWATER RECEIVING FACILITIES
HAULED WASTEWATER RECEIVING BUILDING
MECHANICAL SITE PLAN

BID OPPORTUNITY NO.	CITY DRAWING NUMBER	SHEET	OF
822-2009	1-0102A-M0002-001	1	1

V:\1112\active\111211930\drawing\404_working\sheet_files\mechanical\South End\1-0102A-M0002-001.dwg
2015-02-12 13:54:04 By: jlange

16/710