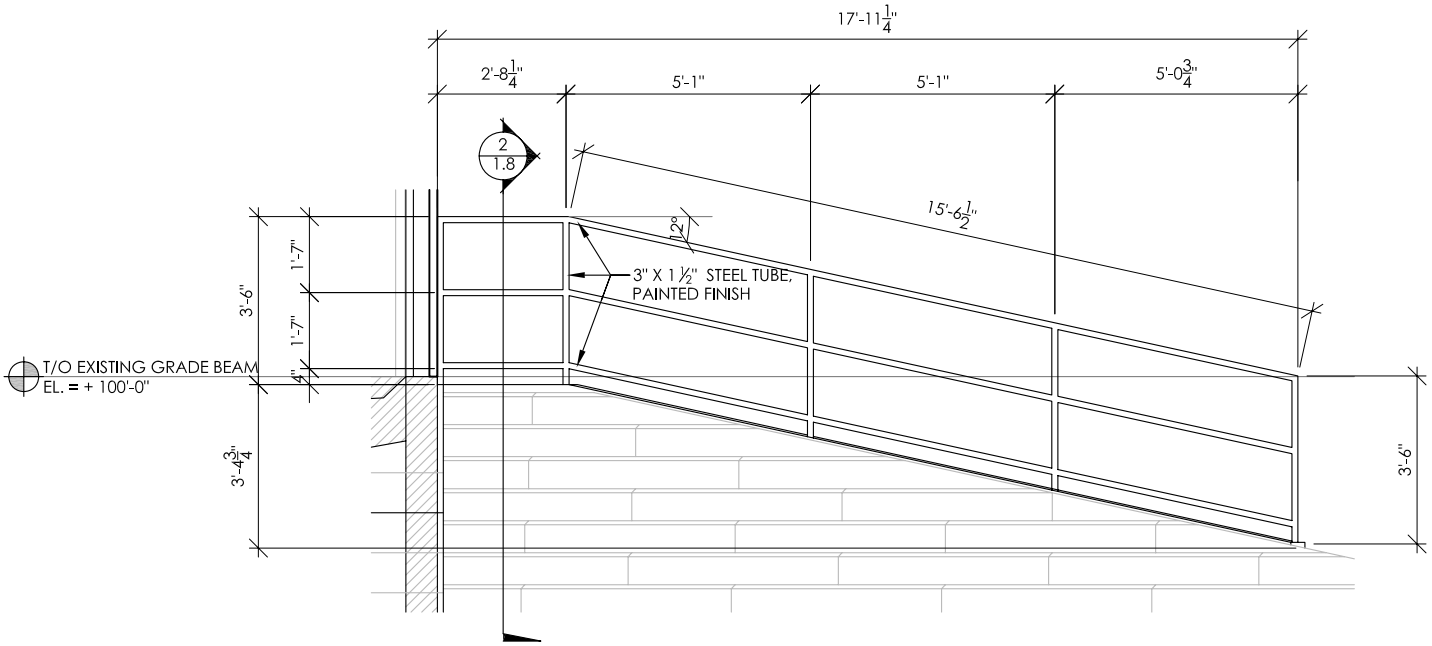

1 GUARD RAIL DETAIL

1/4" = 1'-0"

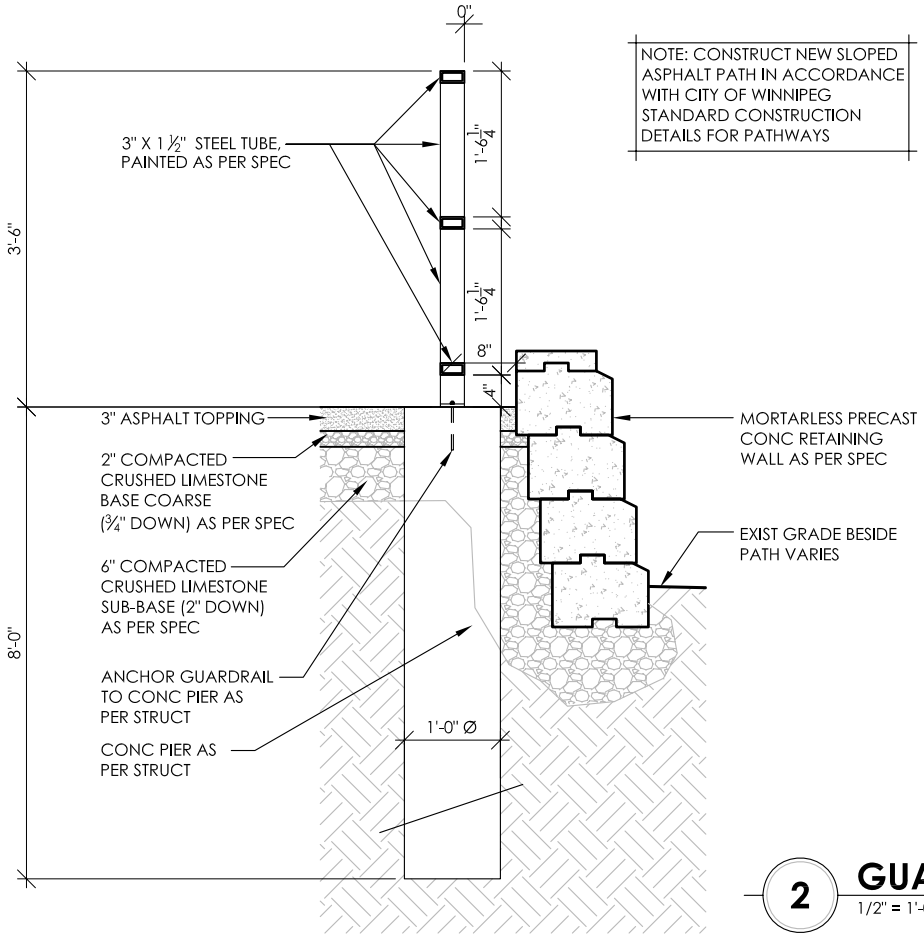

NOTE: CONSTRUCT NEW SLOPED ASPHALT PATH IN ACCORDANCE WITH CITY OF WINNIPEG STANDARD CONSTRUCTION DETAILS FOR PATHWAYS

2 GUARD RAIL DETAIL

1/2" = 1'-0"

Project:	Drawing Title:	Project Number: 0727	Sheet No:
Assiniboine Park Zoo **Asiatic Lion Pavilion** Winnipeg, MB	**GUARD RAIL DETAILS**	Date: 10_MAR_09 ADDENDUM	**ADD** 1.8

678 MAIN STREET WINNIPEG, MB R3B 1E4
204 488 3857 tel. 204 488 0216 fax.
www.bridgmancollaborative.ca
bridgmancollaborative ARCHITECTURE

This drawing is property of the Architect and cannot be reproduced or used without the consent of the Architect. The contractor is responsible for checking and verifying all levels and dimensions and shall report all discrepancies to the Architect and obtain clarification prior to commencing work.

\\FILESERVER\Studio Share\0002 Current Projects\0727 Assiniboine Park Zoo Pavilion\6. Contract Administration\6.1 Contract Documents\6.1.4 Addenda\addendum 1 drawings\0727 – ADD 1.8 Guard Rail details.dwg