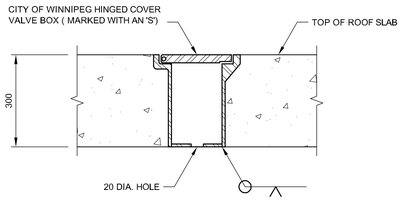

DETAIL 3/2-6
1:10

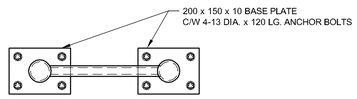

PLAN

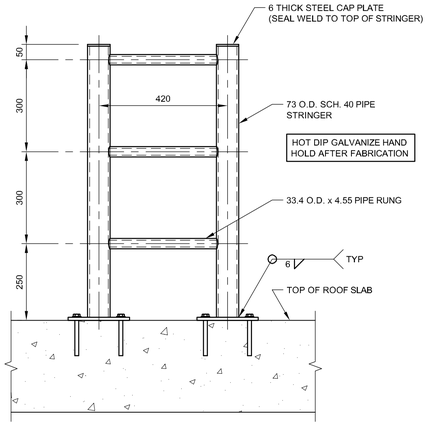

ELEVATION

HAND HOLD DETAIL 1/2-6
1:10

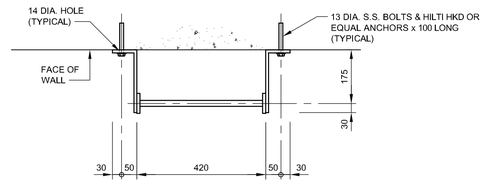

PLAN

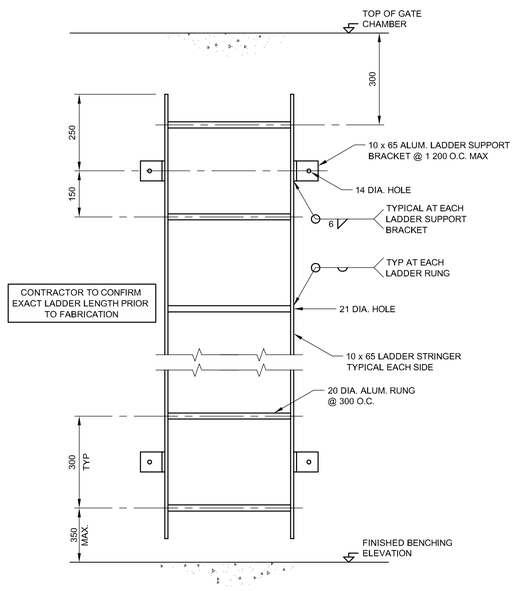

ELEVATION

LADDER DETAIL 2/2-6
1:10

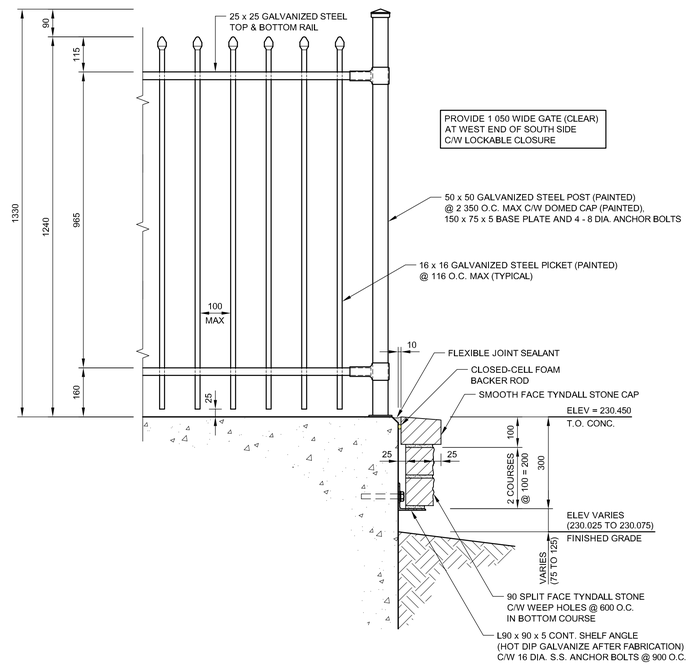

SECTION A/2-6
1:10

APEGM
Certificate of Authorization
MMM Group Limited
No. 4531 Date: 09.09.18

SCALE LEGEND:

1:10 — 0 200 400 600 800

A = DETAIL/SECTION No.
B = DRAWING WHERE SHOWN
C = DRAWING WHERE TAKEN

METRIC
WHOLE NUMBERS INDICATE MILLIMETRES
DECIMALIZED NUMBERS INDICATE METRES

No.	REVISIONS	DATE	BY
0	ISSUED FOR TENDER	09.09.18	GK

MMM GROUP

MMM Group Limited
Suite 111 - 93 Lombard Ave.
Winnipeg, MB R3B 3B1
t. 204.943.3178 | f. 204.943.4948
www.mmm.ca

DESIGNED BY	GK	CHECKED BY	GK
DRAWN BY	CDP	APPROVED BY	JPL
HOR. SCALE	AS NOTED	RELEASED FOR CONSTRUCTION	ORIGINAL SIGNED BY K. ZUREK, P. ENG.
VERT. SCALE	AS NOTED		
DATE	09.09.18	DATE	09.09.18

ENGINEER'S SEAL
PROVINCE OF MANITOBA
Sept. 18, 2009
G. M. KING
Member
24806
REGISTERED PROFESSIONAL ENGINEER

BID OPPORTUNITY: 632-2009
PLOT DATE: 09.04.18

Winnipeg

THE CITY OF WINNIPEG
WASTE AND WATER DEPARTMENT

OUTFALL GATE CHAMBER CONSTRUCTION
LOMBARD AVE. & WATERFRONT DR.
LDS OUTFALL GATE CHAMBER
MISCELLANEOUS DETAILS

CONSULTANT DRAWING No.: 5509090-S6
SHEET 6 OF 6
CITY DRAWING No.: LD-5444

NOTE:
These design documents are prepared solely for the use by the party with whom the design professional has entered into a contract and there are no representations of any kind made by the design professional to any party with whom the design professional has not entered into a contract.

Last saved September 18, 2009 - 3:59 PM by PATERSONC
P:\5509090\1-5509090\5509090-000 Lombard Avenue & Waterfront Drive Outfall Gate Chamber Construction & Upgrade\MMM Drawings\5509090 lombard gate chamber S2 to S5 chamber details (090918).dwg