A1 SIZE – 594mm x 841mm

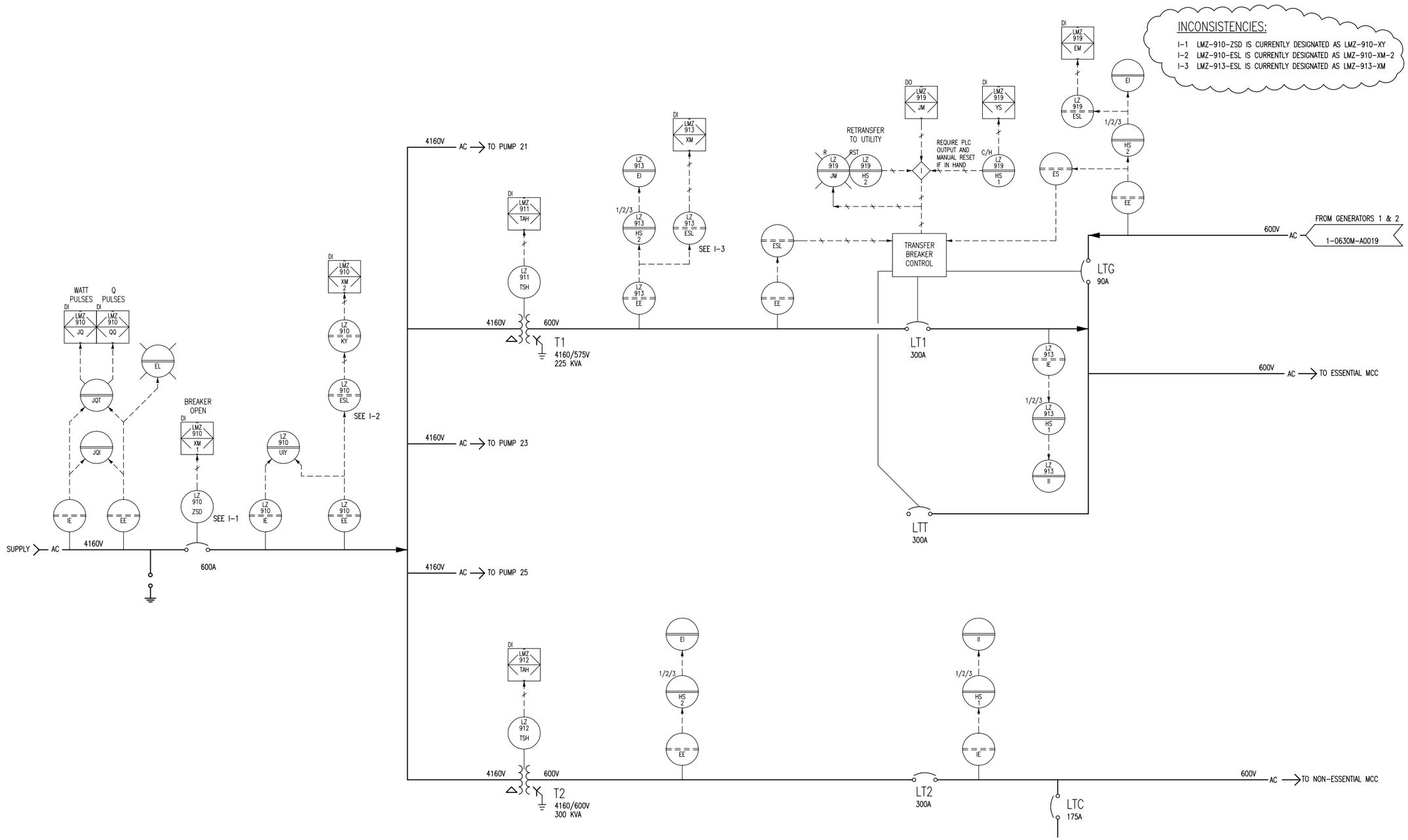

DRAWING NUMBER	REFERENCE DRAWINGS
1-0630M-F-E0003	ELECTRICAL SINGLE LINE DIAGRAM – ESSENTIAL 600V
1-0630M-F-E0002	ELECTRICAL SINGLE LINE DIAGRAM – 4160V DISTRIBUTION
1-0630M-A0001	PROCESS & INSTRUMENTATION DIAGRAMS LEGEND & DETAILS

NOTES:

1. THIS DRAWING SUPERSEDES PARTS OF DRAWINGS D-1917 AND D-5404.

B.M.
ELEV.

FIELD BOOK #:

POSTED TO LBIS

NO.	REVISIONS	DATE	BY
01	REVISED DRAWING NUMBER	2008/02/13	AEO
00	ISSUED FOR CITY USE	2007/08/28	Y.M

SNC-LAVALIN INC.
148 Nature Park Way
Winnipeg, MB, Canada R3P 0X7
204-786-8080

DESIGNED BY	EXISTING	CHECKED BY	CJR
DRAWN BY	EFB	APPROVED BY	CJR
HOR. SCALE	NTS	RELEASED FOR CONSTRUCTION	
VERTICAL	NTS		
DATE	2005/09/29	DATE	

FILENAME: 1-0630M-A0018-001-01.dwg

ENGINEER'S SEAL

THE CITY OF WINNIPEG
WATER AND WASTE DEPARTMENT

MACLEAN PUMPING STATION

PROCESS & INSTRUMENTATION DIAGRAMS
ELECTRICAL SUPPLY

CITY DRAWING NUMBER	SHEET	REV.	SIZE
1-0630M-A0018	001	01	A1

LAST SAVE: 2009/08/14 – 10:13am
PATH: M:\112900\4ENG\49PRC\DD – General DWG\Maclean\1-0630M-A0018-001-01.dwg