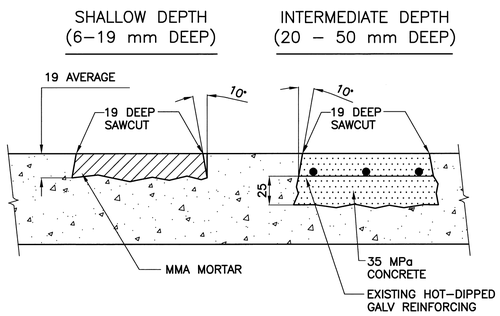

1 DECK REPAIR DETAILS
1 : 10

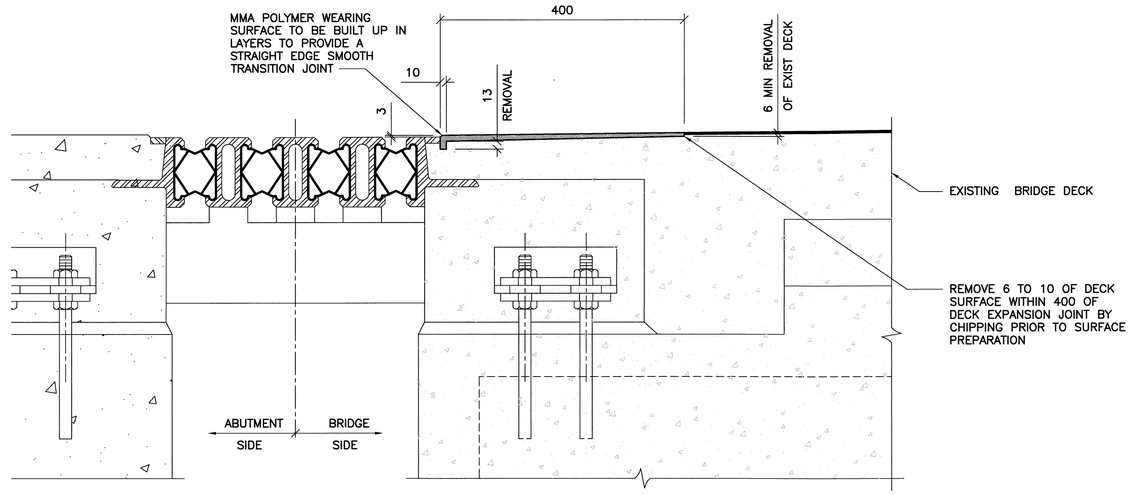

2 TYP DETAIL AT EXP JOINT LOCATION
101 102 1 : 5

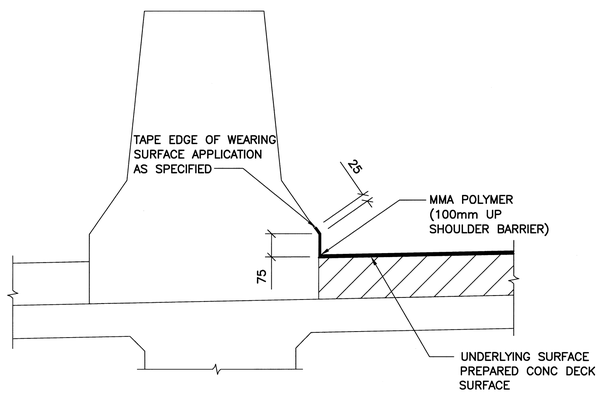

3 TYP DETAIL AT MEDIAN BARRIER
101 102 1 : 10

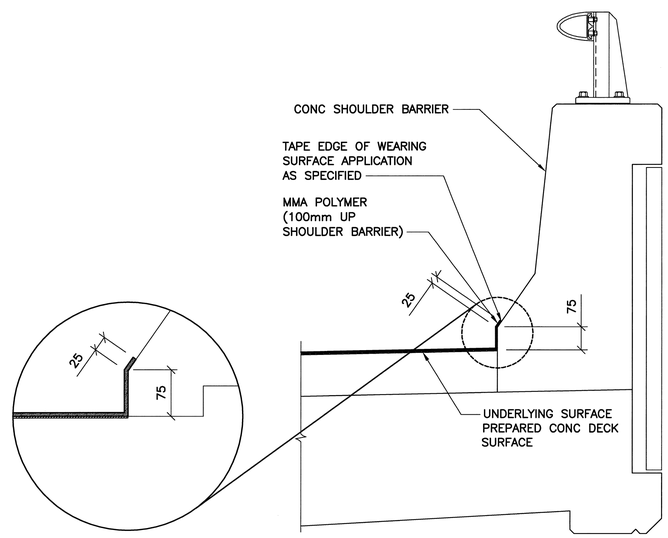

4 TYP DETAIL AT TRAFFIC BARRIER
101 102 1 : 10

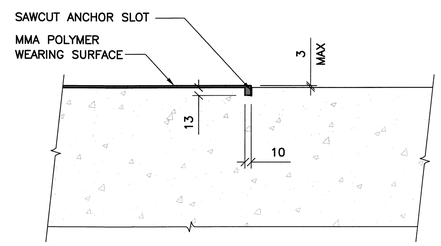

5 TYPICAL ANCHOR DETAIL
101 102 1 : 5

1:5 100 0 100 200mm

1:10 100 0 100 300 500mm

APEGM
Certificate of Authorization
Wardrop Engineering Inc.
No. 195 Date: April 30, 2010

B.M. ELEV.		F.B.	
00	ISSUED FOR TENDER	09.07.08	
NO.	REVISIONS	DATE	BY

WARDROP | Engineering Inc.

DESIGNED BY V.B. | CHECKED BY
DRAWN BY E.M.M. | APPROVED BY
HOR. SCALE: AS NOTED | ACCEPTED BY DATE
VERTICAL:
DATE 03.02.09 | B. A. NEIRINCK, P.ENG. BRIDGE PLANNING & OPERATIONS ENGINEER

PROVINCE OF MANITOBA
V. BANTHIA
Member
23477
REGISTERED PROFESSIONAL ENGINEER

CONSULTANT DRAWING NO.
0500070600–DWG–S0002

Winnipeg
THE CITY OF WINNIPEG
PUBLIC WORKS DEPARTMENT
ENGINEERING DIVISION

PROVENCHER VEHICULAR BRIDGE
EASTBOUND LANE – APPLICATION OF MMA POLYMER WEARING SURFACE

WEARING SURFACE DETAILS

CITY DRAWING NUMBER B110–09–02
SHEET 2 OF 2
102