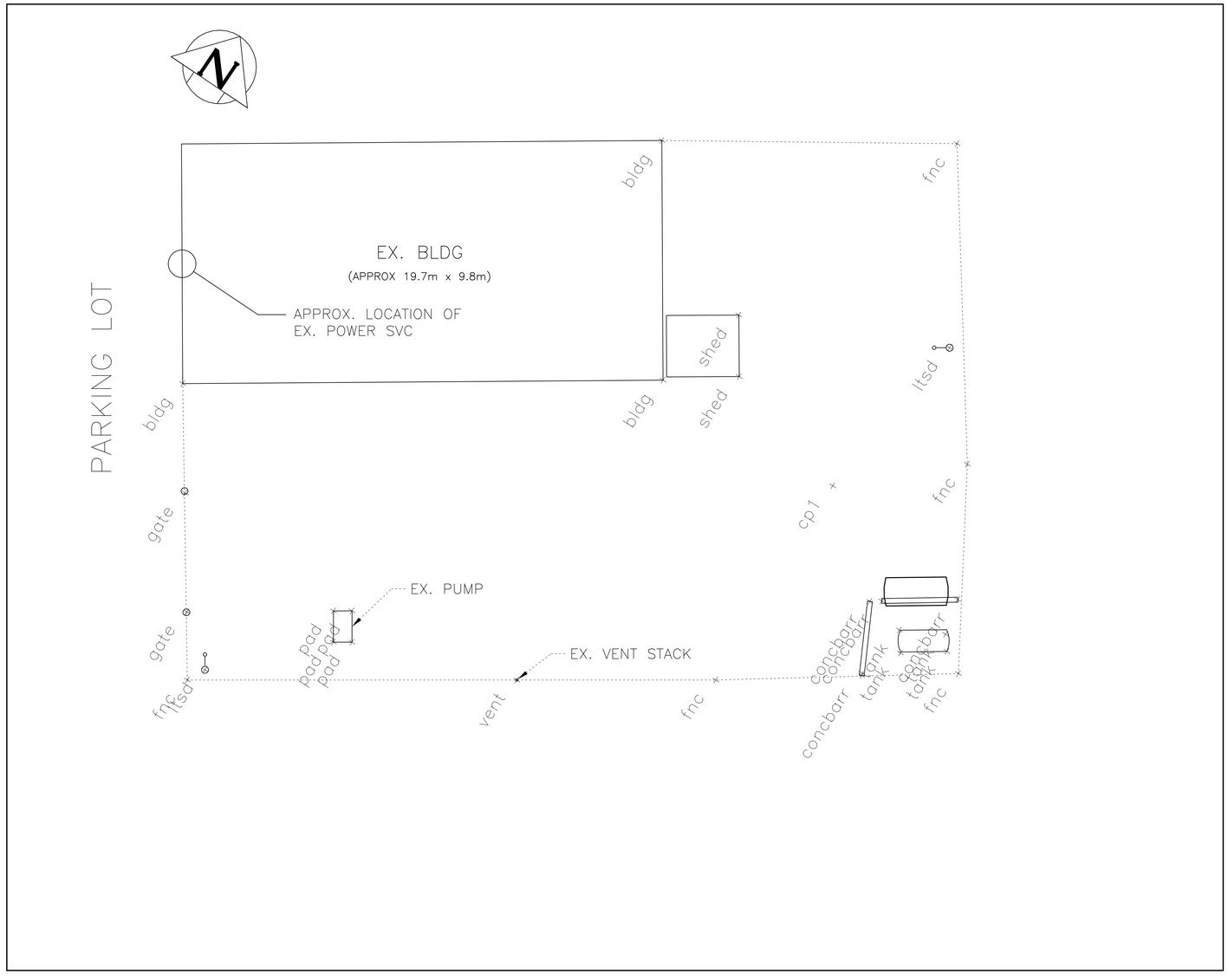

SITE OVERVIEW

SCALE: 1:100

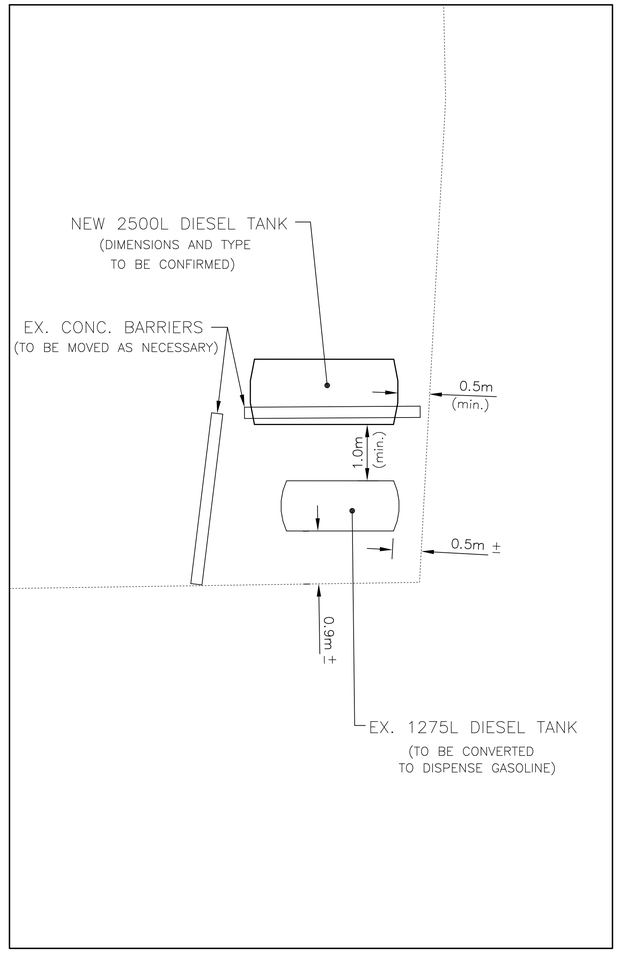

TANK AREA DETAIL

SCALE: 1:50

EXISTING	LEGEND	PROPOSED	EXISTING	LEGEND	PROPOSED
	HYDRO			SHAW PEDESTAL	
	M.T.S.			HYDRO TRANSFORMER	
	GAS			JOINT USE PEDESTAL	
	WASTE WATER SEWER			PROPERTY LINE	
	WATERMAIN			JUNCTIONS	
	LAND DRAINAGE SEWER			CONCRETE	
	SHAW CABLE			ASPHALT	
	MANHOLE			SIDEWALK	
	HYDRANT			DITCH	
	GATE VALVE				
	SURVEY BAR				
	CATCH BASIN				
234.47	ELEVATION	235.195			
	CULVERT				
	GEODETIC MONUMENT				

LOCATION APPROVED
UNDERGROUND STRUCTURES

SUPV. U/G STRUCTURES COMMITTEE DATE

NOTE:
LOCATION OF UNDERGROUND STRUCTURES AS SHOWN ARE BASED ON THE BEST INFORMATION AVAILABLE BUT NO GUARANTEE IS GIVEN THAT ALL EXISTING UTILITIES ARE SHOWN OR THAT THE GIVEN LOCATIONS ARE EXACT. CONFIRMATION OF EXISTENCE AND EXACT LOCATION OF ALL SERVICES MUST BE OBTAINED FROM THE INDIVIDUAL UTILITIES BEFORE PROCEEDING WITH CONSTRUCTION.

B.M. ELEV. N/A

FIELD BOOK #:

POSTED TO LBIS

NO.	REVISIONS	DATE	BY

LINDAL CONSULTING LTD.

DESIGNED BY	D.C.	CHECKED BY	DJL
DRAWN BY	D.C.	APPROVED BY	DJL
HOR. SCALE	1:100	RELEASED FOR CONSTRUCTION	
VERTICAL	N/A		
DATE	APR 2009	DATE	

APEGM
Certificate of Authorization
Lindal Consulting Ltd.
No. 817 April 17, 2009

ENGINEER'S SEAL
PROVINCE OF MANITOBA
ORIGINAL SEAL BY
D.J.
LINDAL
APR. 17/2009
REGISTERED PROFESSIONAL ENGINEER

CONSULTANT DRAWING NO.
207–007–S1

Winnipeg
THE CITY OF WINNIPEG

CITY OF WINNIPEG FLEET MANAGEMENT AGENCY
SITE LAYOUT PLAN
WINDSOR PARK GOLF COURSE
10 DES MEURONS ST
WINNIPEG, MB

SHEET 1 OF 1