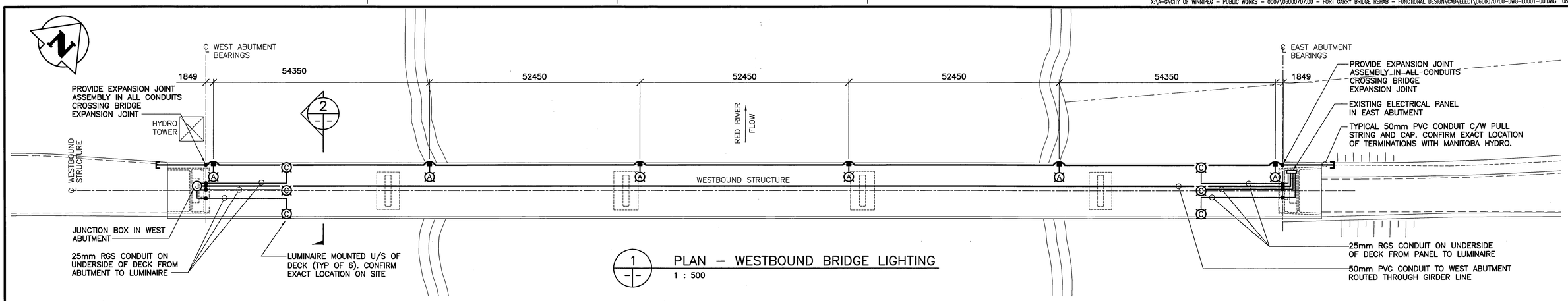

1 PLAN – WESTBOUND BRIDGE LIGHTING
1 : 500

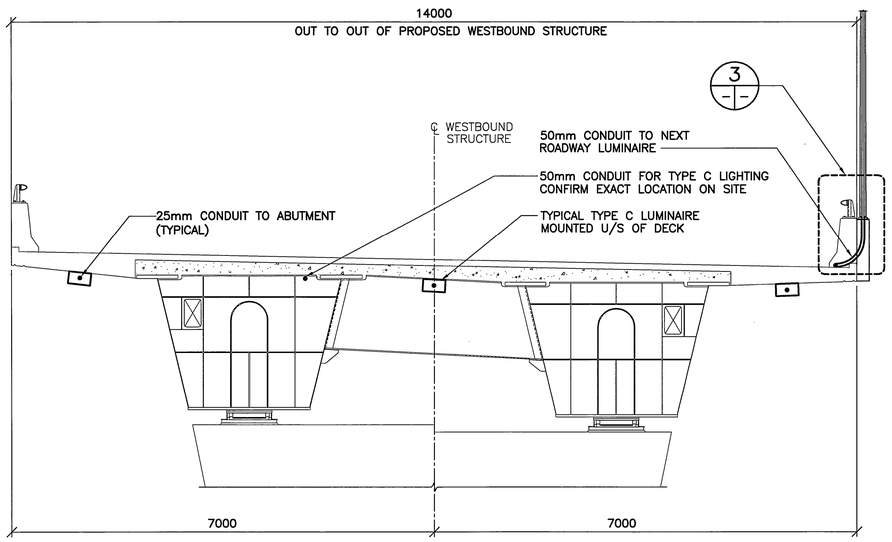

2 PEDESTRIAN UNDERPASS LIGHTING DETAIL
1 : 50

NOTES:

1. EAST ABUTMENT AS SHOWN.
2. WEST ABUTMENT OPPOSITE HAND.

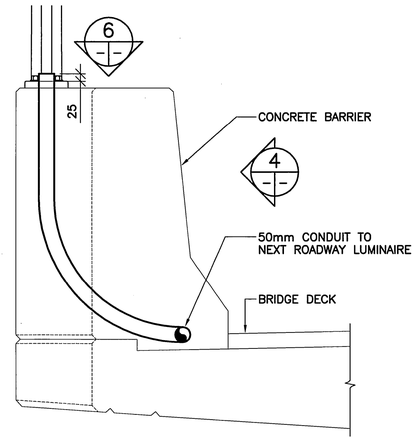

3 TYPE A LUMINAIRE BASE DETAIL – SECTION
1 : 10

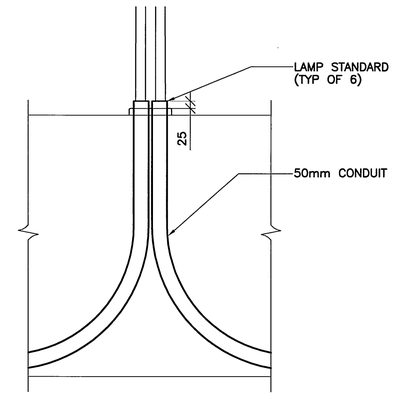

4 TYPE A LUMINAIRE BASE DETAIL – SOUTH VIEW
1 : 10

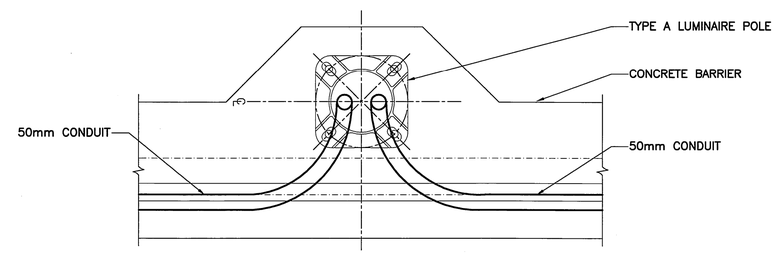

6 TYPE A LUMINAIRE BASE DETAIL – TOP VIEW
N.T.S.

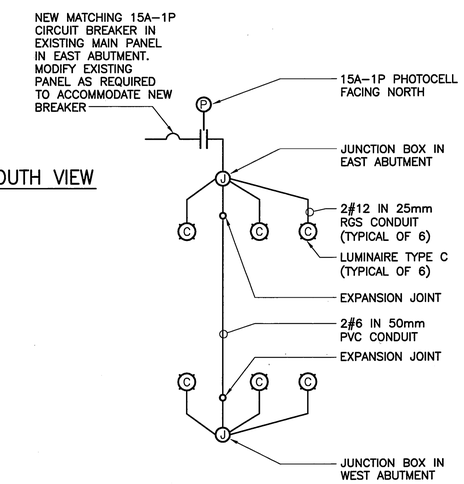

7 TYPE C LUMINAIRE WIRING DIAGRAM
N.T.S.

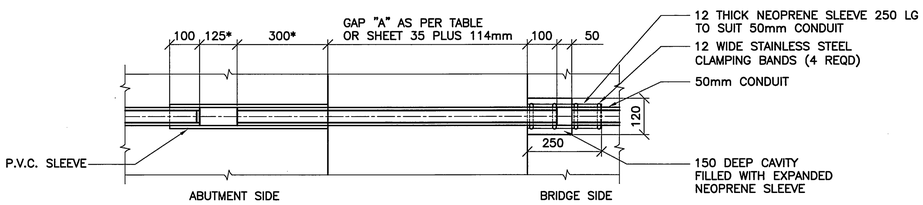

5 TYPICAL DUCT EXPANSION JOINT ASSEMBLY
N.T.S.

* THESE DIMENSIONS ARE SHOWN AT 20°C

LUMINAIRE SCHEDULE

TYPE	MANUFACTURER	CATALOGUE NO.	VOLTAGE	LAMPS	DESCRIPTION/MOUNTING INSTRUCTIONS
A			240V/1ø	1–400W HPS	POLE MOUNTED LUMINAIRE ON 13.7m ALUMINIUM SPUN DAVIT C/W 1.8m ARM. SUPPLIED, INSTALLED, WIRED, AND CONNECTED BY MANITOBA HYDRO. CONDUIT AND BASES BY THIS CONTRACTOR.
B					NOT USED.
C	GE LIGHTING	SCMM–17–M–120–M–I–P–SC5–GR	120V/1ø	1–175W MH	SURFACE MOUNTED DOWNLIGHT C/W WIRE GUARD. SUPPLIED, INSTALLED, WIRED, AND CONNECTED BY THIS CONTRACTOR.

APEGM
Certificate of Authorization
Wardrop Engineering Inc.
No. 195 Expiry: April 30, 2008

B.M. ELEV. F.B.

NO.	REVISIONS	DATE	BY
00	ISSUED FOR TENDER	08.02.04	L.K.

WARDROP | Engineering Inc.

DESIGNED BY L.K. CHECKED BY
DRAWN BY H.P.C.C./T.S. APPROVED BY
HOR. SCALE: AS NOTED VERTICAL:
ACCEPTED BY DATE 08-02-05
RANDY FINDAS, P. ENG. BRIDGES PROJECTS ENGINEER
DATE 07.11.15

PROVINCE OF MANITOBA
L.KORENBAUM
08.02.04
REGISTERED PROFESSIONAL ENGINEER

CONSULTANT DRAWING NO.
0600070700–DWG–E0001

Winnipeg

THE CITY OF WINNIPEG
PUBLIC WORKS DEPARTMENT
TRANSPORTATION ENGINEERING DIVISION

FORT GARRY TWIN BRIDGES
WESTBOUND STRUCTURE REHABILITATION AND ASSOCIATED ROADWORKS

BRIDGE AND PEDESTRIAN UNDERPASS LIGHTING AND DETAILS

CITY DRAWING NUMBER B173–07–043W
SHEET 43 OF 54
43