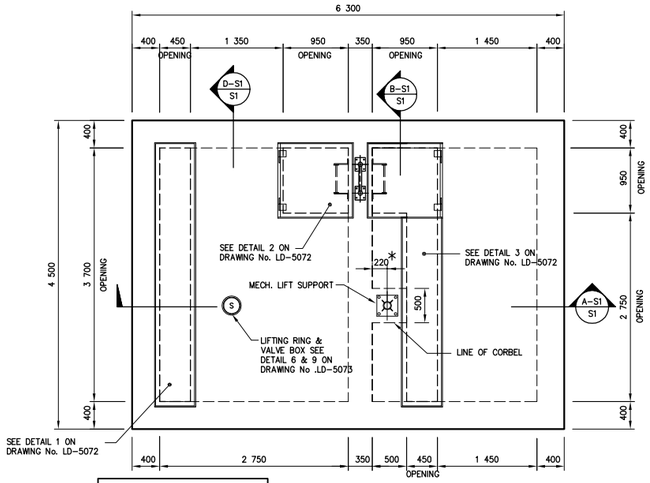

* = DIMENSION MAY VARY BASED ON SLUICE GATE SUPPLIER

ROOF PLAN
1:40

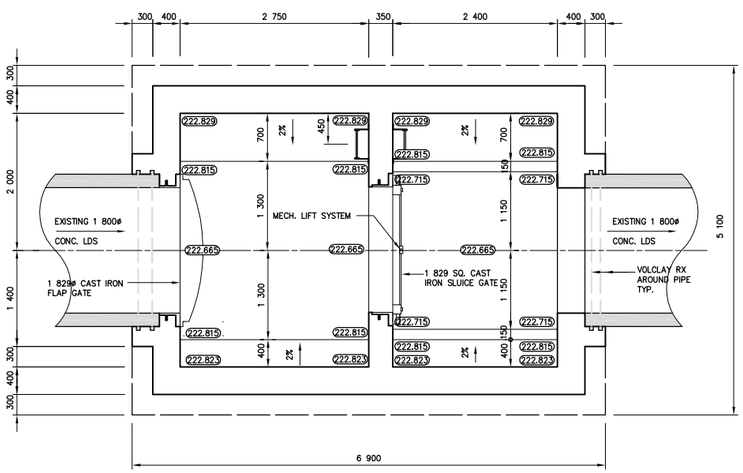

SECTION C-S1
1:40

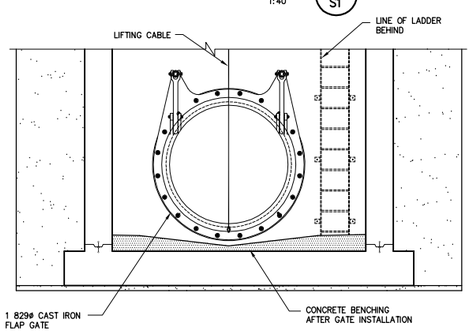

SECTION D-S1
1:40

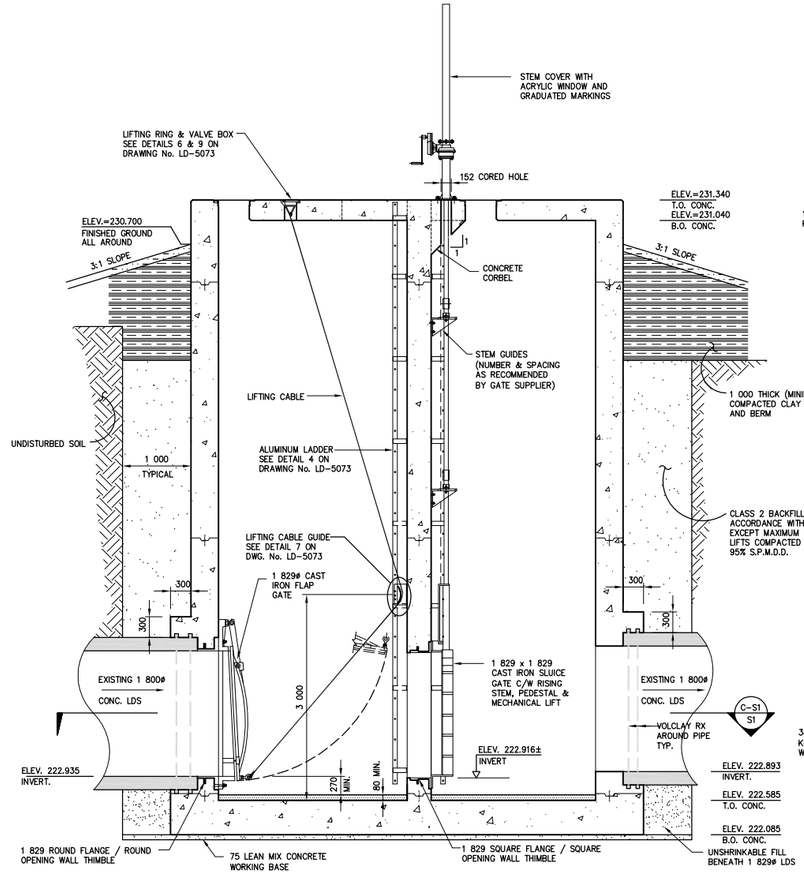

SECTION A-S1
1:40

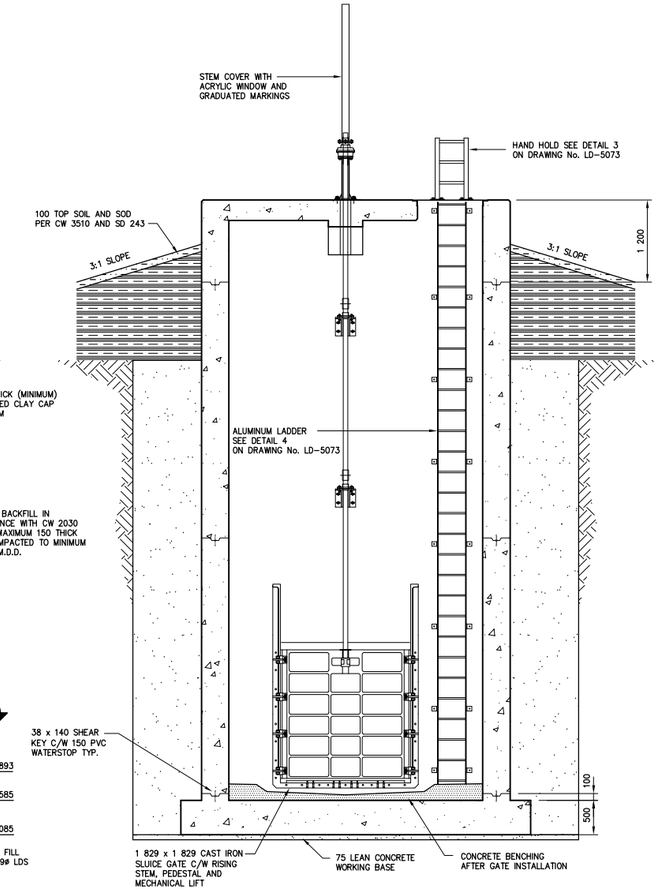

SECTION B-S1
1:40

NOTE: CONTRACTOR SHALL CONFIRM ACTUAL PIPE INVERT AND NOTIFY CONTRACT ADMINISTRATOR OF ANY DISCREPANCY WITH THE INVERTS SHOWN. CONTRACTOR TO CONTACT CITY OF WINNIPEG, WATER AND WASTE DEPARTMENT, FOR CURRENT GROUNDWATER ELEVATION.

A = DETAIL/SECTION No.
B = DRAWING WHERE SHOWN
C = DRAWING WHERE TAKEN

APEGM
Certificate of Authorization
MMM Group Limited
No. 4531 Date: AUG.27,2008

1:40 0.0 0.5 1.0 2.0 3.0 4.0 5.0 6.0

METRIC
WHOLE NUMBERS INDICATE MILLIMETRES
DECIMALIZED NUMBERS INDICATE METRES

NO.	REVISIONS	DATE	BY
0	ISSUED FOR CONSTRUCTION	08.08.27	GK

MMM GROUP
MMM Group Limited
Suite 111-93 Lombard Ave.
Winnipeg, MB R3B 3B1
t. 204.943.3178
f. 204.943.4948
www.mmm.ca

DESIGNED BY	MW	CHECKED BY	GK
DRAWN BY	RCS	APPROVED BY	JPL
HOR. SCALE / VERTICAL	AS SHOWN	RELEASED FOR CONSTRUCTION	
DATE		DATE	08 08 27

ENGINEER'S SEAL
PROVINCE OF MANITOBA
G. M. KING
Aug 27, 2008
Member 24806
REGISTERED PROFESSIONAL ENGINEER

BID OPPORTUNITY 629-2008
PLOT DATE: 08 08 27

Winnipeg
THE CITY OF WINNIPEG
WATER AND WASTE DEPARTMENT

2008 OUTFALL GATE CHAMBER CONSTRUCTION AND UPGRADES

SOMERSET AVENUE
LDS OUTFALL GATE CHAMBER

CONCRETE DETAILS

CONSULTANT DRAWING NUMBER 42012–S1
SHEET 2 OF 11
CITY DRAWING NUMBER LD–5064

NOTE:
These design documents are prepared solely for the use by the party with whom the design professional has entered into a contract and there are no representations of any kind made by the design professional to any party with whom the design professional has not entered into a contract.

Aug 28, 2008 – 8:43am
P:\42000 – 42099\42012 2008 Outfall Gate Chamber Construction and Upgrades\Drawings\Somerset\42012 Somerset S1 & S2 Concrete & Reinforcing.dwg –Lds:Concrete