DRAWING NOTES - PIPING SCH.

1. PROVIDE NEW WATER METER TO EXIST. SERVICE. METER TO BE NEPTUNE, T-10, SIZE: 1½" TO AWWA C 700 STANDARD.
2. REPLACE EXISTING PUMP WITH NEW AS SPECIFIED. ALTER PIPING TO INCORPORATE UNIONS. VALVES AND COMPRESSED AIR BLOW-OUT CONNECTIONS. RETAIN ELECTRICIAN TO WIRE EXISTING PANEL IN SPACE.

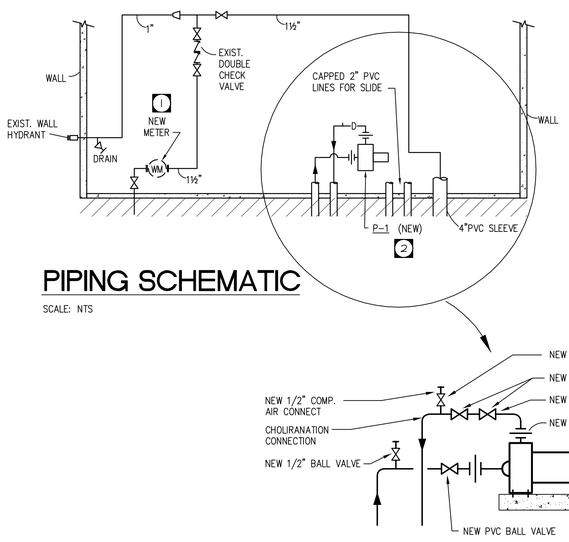

PIPING SCHEMATIC

SCALE: NTS

DRAWING NOTES - SITE PLAN:

1. APPROXIMATE LOCATION OF EXISTING 2" SUPPLY AND RETURN PIPING FROM EXISTING /REMOVED WATER SLIDE AVAILABLE FOR RE-USE. CONFIRM EXACT LOCATION OF PIPING ON SITE PRIOR TO DEMOLITION OF EXISTING CONCRETE DECK.
2. APPROXIMATE LOCATION OF SUPPLY AND RETURN RISERS ON SITE. CONFIRM FINAL LOCATION ON SITE.
3. PROPOSED LOCATION OF NEW PUMP SUCTION AND DISCHARGE PIPING FROM EXISTING MECHANICAL ROOM.
4. POOL WATER CIRCULATION SUPPLY PIPING TO FORM PERIMETER SUPPLY RING AROUND POOL SIDE WALL. COORDINATE INSTALLATION WITH STRUCTURAL ON SITE.
5. POOL WATER CIRCULATION SUCTION PIPING TO FORM PERIMETER RETURN RING AROUND POOL SIDEWALL. COORDINATE INSTALLATION WITH STRUCTURAL ON SITE.
6. PROVIDE NEW RETURN AND SUPPLY FITTINGS AT POOL SIDEWALL AS SPECIFIED. CONFIRM INSTALLATION REQUIREMENTS WITH MANUFACTURER'S DATA. COORDINATE WITH STRUCTURAL.
7. PROVIDE ISOLATION VALVES ON SUPPLY AND RETURN FITTINGS AS SPECIFIED. REFER TO DETAIL FOR ADDITIONAL REQUIREMENTS.
8. INSTALL NEW POOL DRAIN FITTING AS SPECIFIED. COORDINATE EXACT PLACEMENT WITH STRUCTURAL ON SITE.
9. APPROXIMATE LOCATION OF EXISTING VALVE BOX. EXTEND NEW POOL DRAIN AND PROVIDE NEW ISOLATION VALVE WITH EXTENDED SPINDLE AND SLEEVE.
10. CONNECT NEW STORM SEWER TO EXISTING MANHOLE. CONFIRM INVERT ON SITE.
11. EXTEND NEW STORM DRAINAGE TO CONNECT TO EXISTING MANHOLE. CONFIRM EXACT INVERT ON SITE.
12. APRON DRAIN (TYPICAL OF EIGHT (8). CONNECT TO PERIMETER 4" WEEPING TILE LOOP. (2" PVC FROM DRAIN TO W.T.).
13. CONNECT 6" PVC DRAIN LINE FROM WEEPING TILE AND APRON DRAINS TO EXISTING.

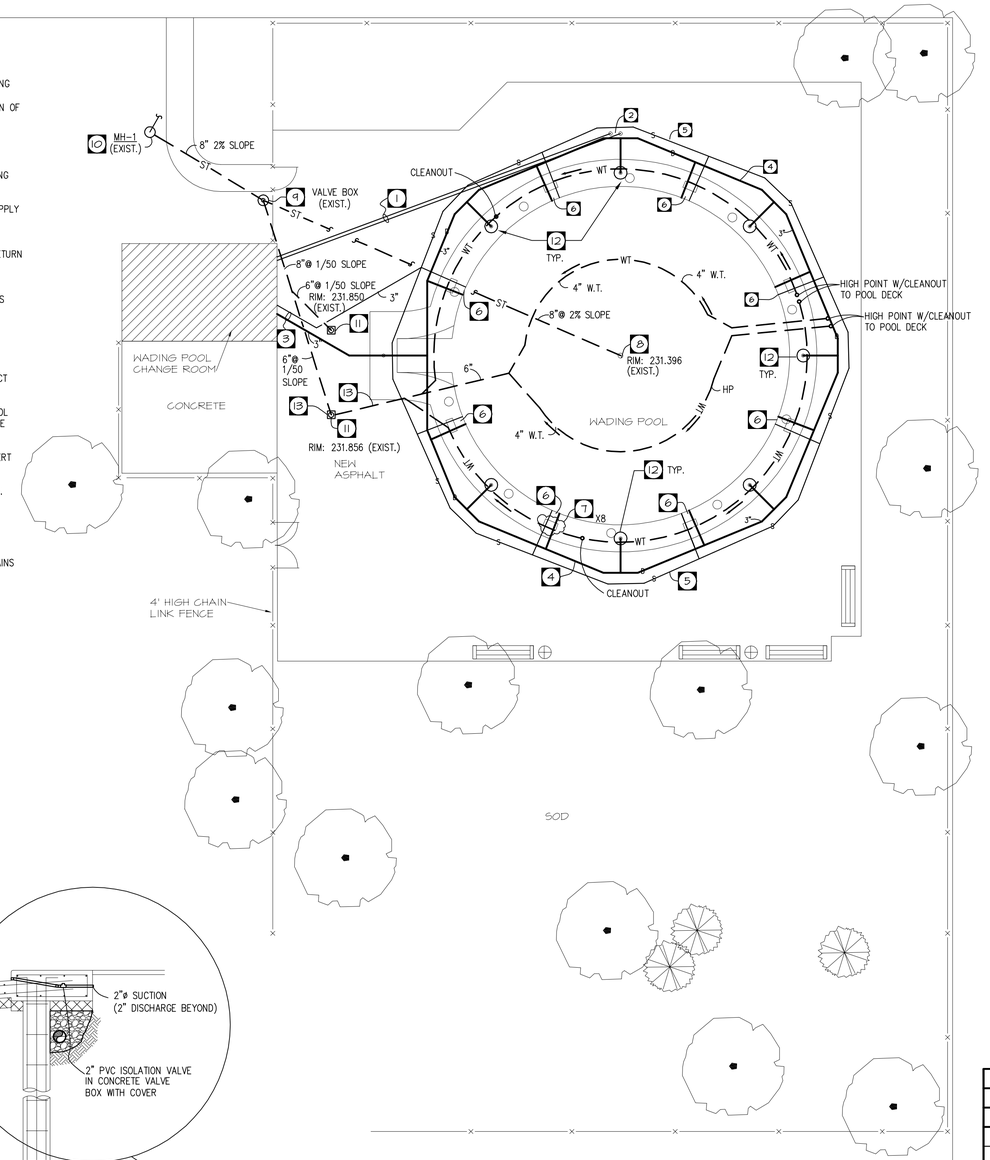

SITE PLAN - MECHANICAL

SCALE: 3/32" = 1'-0"

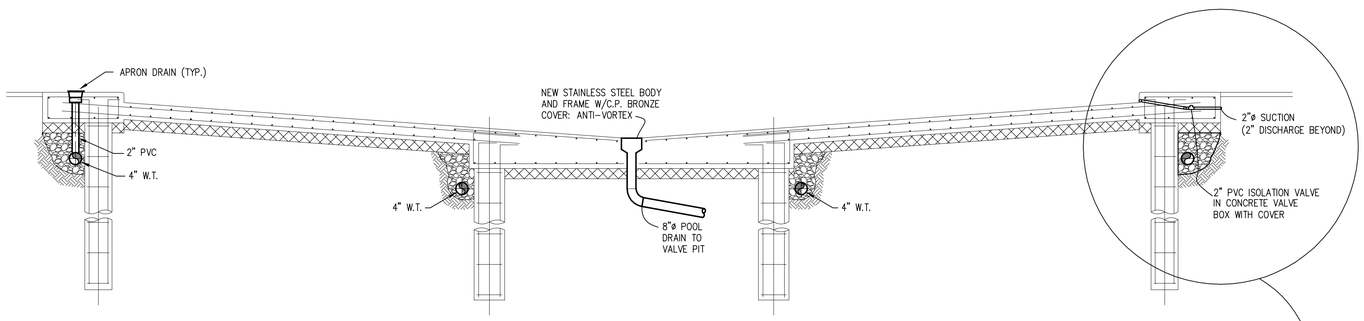

VALVE PIT SECTION/DETAIL

SCALE: NTS

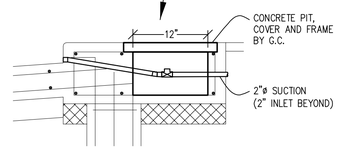

PROVINCE OF MANITOBA
J. H. GUENTHER
08/04/30
REGISTERED ENGINEER

APEGM
Certificate of Authorization
Nova 3 Engineering Ltd.
No.962 Date: 08/04/30

CONSULTANT

NOVA 3 ENGINEERING LTD.
CONSULTING ENGINEERS

201-120 FORT STREET
WINNIPEG, MANITOBA
R3C 1C7

TEL.: (204) 943-6142
FAX.: (204) 942-1276
JN 28-097

THIS DRAWING IS THE EXCLUSIVE PROPERTY OF NOVA 3 ENGINEERING LTD. AND MAY ONLY BE REPRODUCED WITH THE WRITTEN PERMISSION OF NOVA 3 ENGINEERING LTD.
THE CONCEPT AND DESIGN INCORPORATED INTO THIS DRAWING ARE BASED ON INFORMATION PROVIDED BY THE CLIENT AND OTHER RELIABLE SOURCES. PROFESSIONAL ENGINEER ACCEPTS NO RESPONSIBILITY FOR DRAWING AND DESIGN UNLESS DRAWING IS ACCOMPANIED BY ORIGINAL SEALED AND SIGNED LETTER OF INTENT AND CERTIFICATE OF INSPECTION.
REFER TO WWW.NOVA3.CA FOR CAUTIONARY NOTES.

NO.	REVISIONS	BY	DATE
B	ISSUED FOR PERMIT	JHG	APRIL 30/08
A	ISSUED FOR REVIEW	JC	APRIL18/08

F.A. Roberts & Associates
Engineering Consultants

CLIENT: CITY OF WINNIPEG

PROJECT: SHAUGHNESSY PARK WADING POOL

LOCATION: WINNIPEG, MANITOBA

DRAWING TITLE: SITE PLAN - MECHANICAL

DSN/DWN BY: JC DATE: APR08
CHECKED BY: JAK DATE:

DWG NO.: M-1
REVISED: -