WO 101-R4

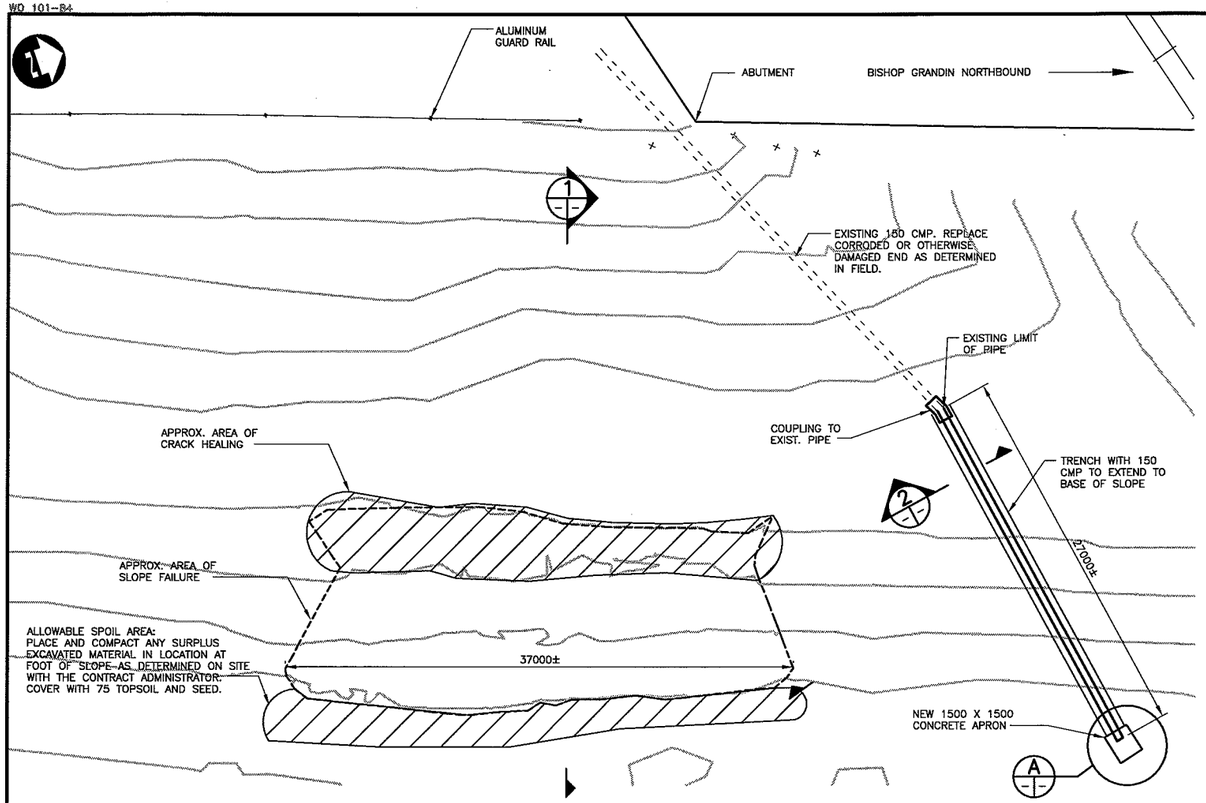

PLAN
1:500

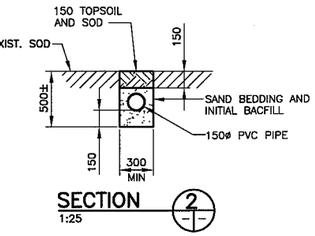

SECTION 2
1:25

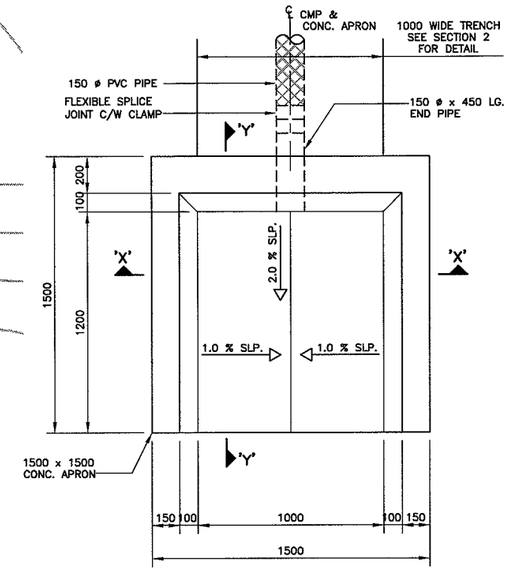

PLAN DETAIL A
1: 15

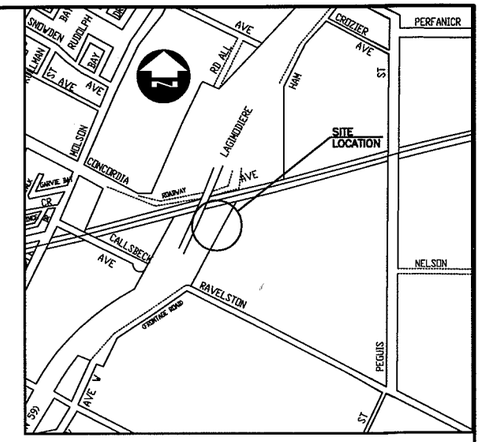

LOCATION PLAN

NOTES:

1. CONTRACTOR TO OBTAIN UTILITY CLEARANCES PRIOR TO COMMENCING EXCAVATION.
2. EARTHFILL MATERIAL SHALL CONSIST OF EITHER SUITABLE SITE MATERIAL OR CLAY BORROW MATERIAL AS APPROVED BY THE CONTRACT ADMINISTRATOR.
3. WITHIN THE N–S LIMITS OF THE TENSION CRACK:
   i) EXCAVATE TO 0.5 METRES BELOW THE TENSION CRACK AND 3.6 METRES WIDE AS SHOWN.
   ii) TAPER THE WEST EDGE AT A 3:1 SLOPE.
   iii) PLACE AND COMPACT SUITABLE EARTHFILL MATERIAL INTO THE 3.6 METRE WIDE TRENCH.
   iv) EXCESS BACKFILL MATERIAL MAY BE PLACED AT THE TOE OF THIS SLOPE WITH A 3:1 SLOPE.
   v) PLACE 75 TOPSOIL AND SOD.
4. REPLACE CORRODED OR OTHERWISE DAMAGED END OF EXISTING 150 CMP AS DETERMINED IN FIELD WITH CONTRACT ADMINISTRATOR.
5. REPAIR ANY DAMAGE TO THE ADJACENT AREAS OF THE SITE CAUSED BY THE CONSTRUCTION ACTIVITIES TO THE SATISFACTION OF THE CONTRACT ADMINISTRATOR.

DRAWING REDUCED NOT TO SCALE

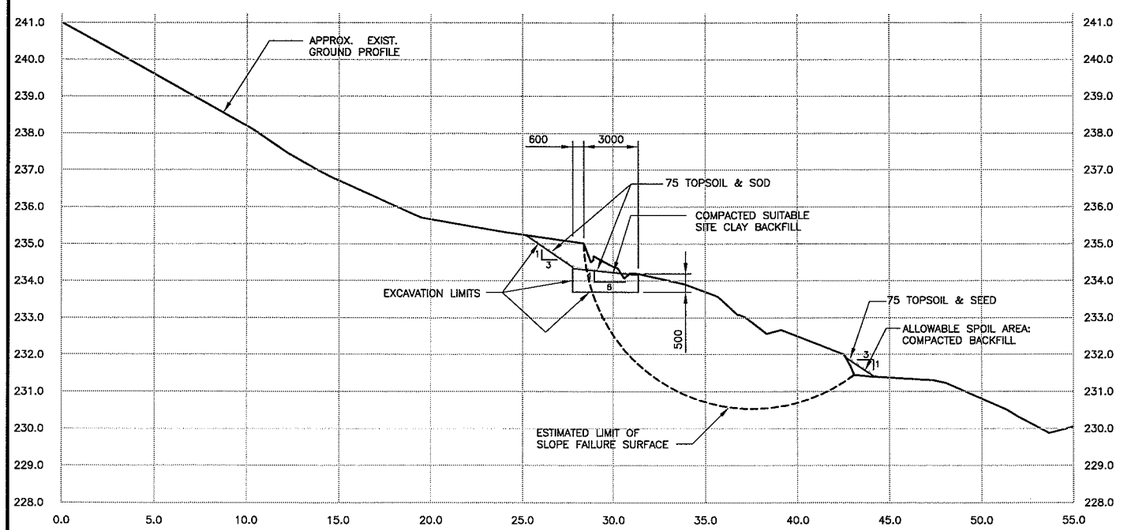

SECTION 1
H: 1:150
V: 1:75

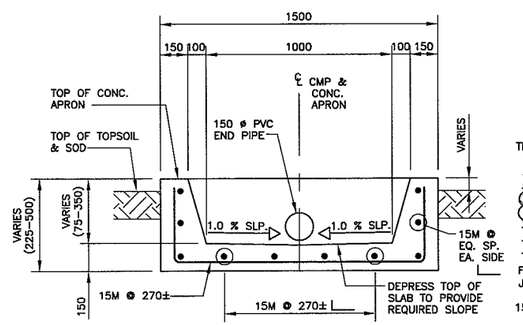

SECTION 'X'–'X'
1: 15

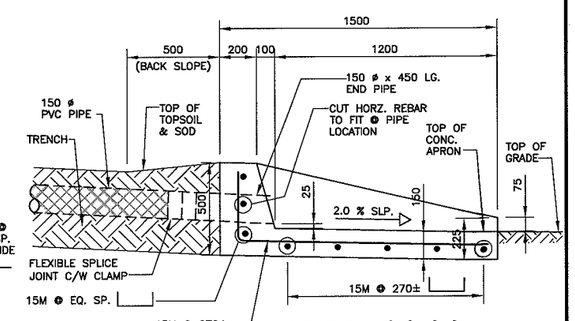

SECTION 'Y'–'Y'
1: 15

WARNING

CONTRACTOR TO OBTAIN UTILITY CLEARANCES PRIOR TO COMMENCING EXCAVATION.

UNDERGROUND INFORMATION SHOWN ON THIS DRAWING IS BASED ON INFORMATION RECEIVED FROM THE CITY OF WINNIPEG UNDERGROUND STRUCTURES AND MAY NOT BE ENTIRELY ACCURATE OR COMPLETE.

METRIC
WHOLE NUMBERS INDICATE MILLIMETRES
DECIMALIZED NUMBERS INDICATE METRES

B.M. ELEV.			
2	ISSUED FOR TENDER	07/04/27	MRD
1	ISSUED FOR CITY REVIEW	07/04/23	MRD
0	ISSUED FOR CITY REVIEW	07/04/12	MRD
NO.	REVISIONS	DATE	BY

DESIGNED BY	MRD
DRAWN BY	MRD
CHECKED BY	AOD
REVIEWED BY	RAW
HOR. SCALE	AS NOTED
VERTICAL	
DATE	APR 2007

DILLON CONSULTING

RELEASED FOR CONSTRUCTION

DATE

ENGINEER'S SEAL: PROVINCE OF MANITOBA, A.O. DRYEBROUGH, REGISTERED PROFESSIONAL ENGINEER

ENGINEER'S SEAL: PROVINCE OF MANITOBA, R.A. WIEBE, REGISTERED PROFESSIONAL ENGINEER

CONSULTANT PROJECT NO.
06-5919/07-7519

Winnipeg

THE CITY OF WINNIPEG
PUBLIC WORKS DEPARTMENT

2007 BRIDGE MAINTENANCE
ROUTE 20 AT KEEWATIN OVERPASS

SE QUADRANT – NORTH FAILURE
CRACK HEALING REPAIR

CITY DRAWING NUMBER B123-07-03
SHEET 3 OF 4

BID OPP NO. 295-2007

40DILLON ACAD FILE: 12/22/2006G:\CAD\065919\ROUTE 20 SLOPE STABILITY\CURRENT\Contract\30F4_RTE20_SE_QUAD_N_FAILURE.dwg