SHEET: COW-A1 (03/2005)

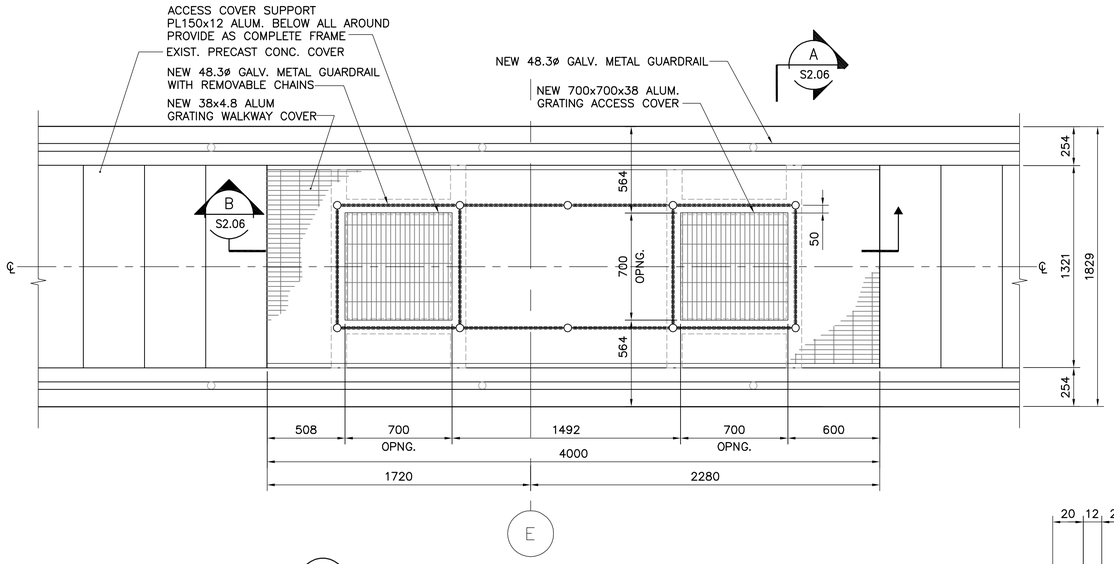

1 S1.02 WALKWAY COVER OPENINGS DETAIL
1:20

*ALL OPENING LOCATIONS
TO BE VERIFIED ON SITE

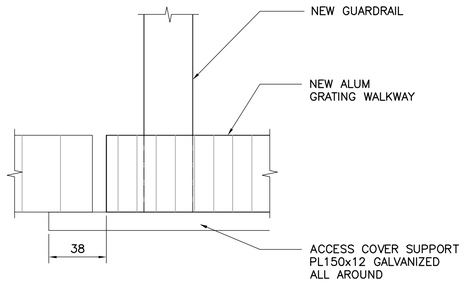

3 S2.06 GUARDRAIL DETAIL
1:2

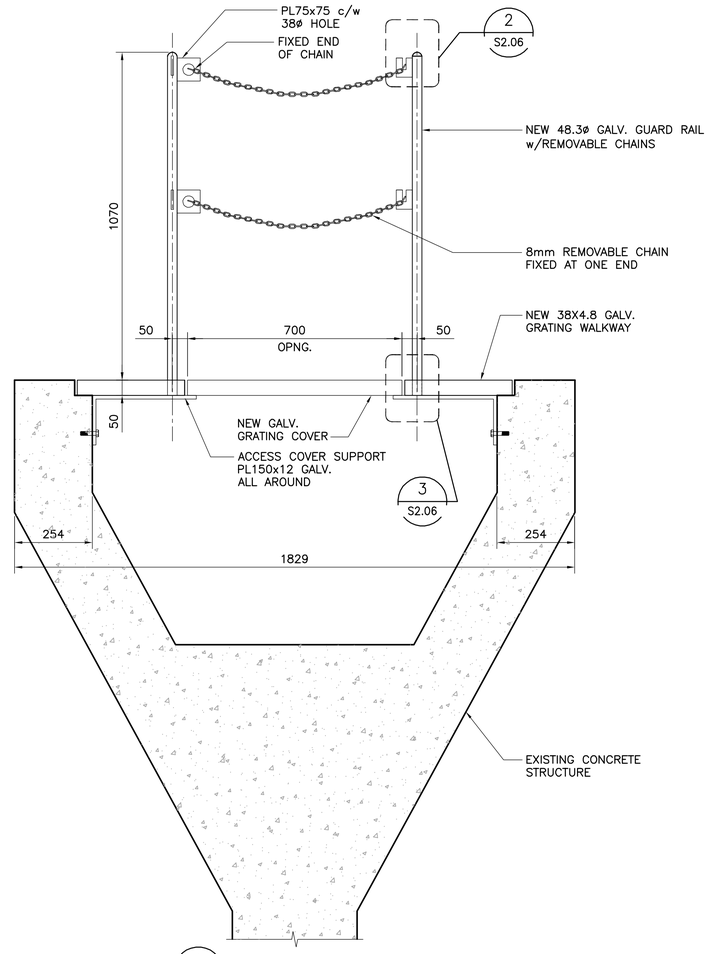

A S2.06 WALKWAY DETAIL
1:10

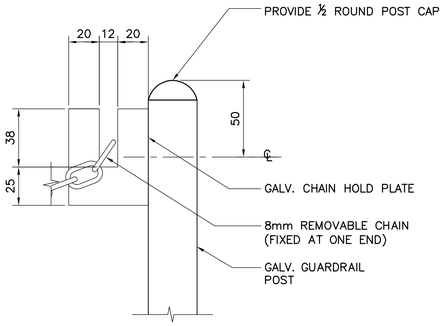

2 S2.06 GUARDRAIL DETAIL
1:2

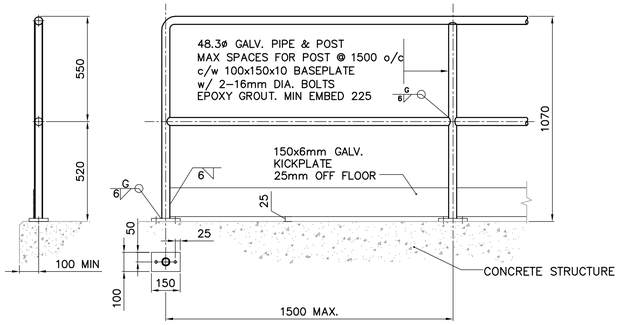

D S1.02 GUARDRAIL DETAIL
1:20

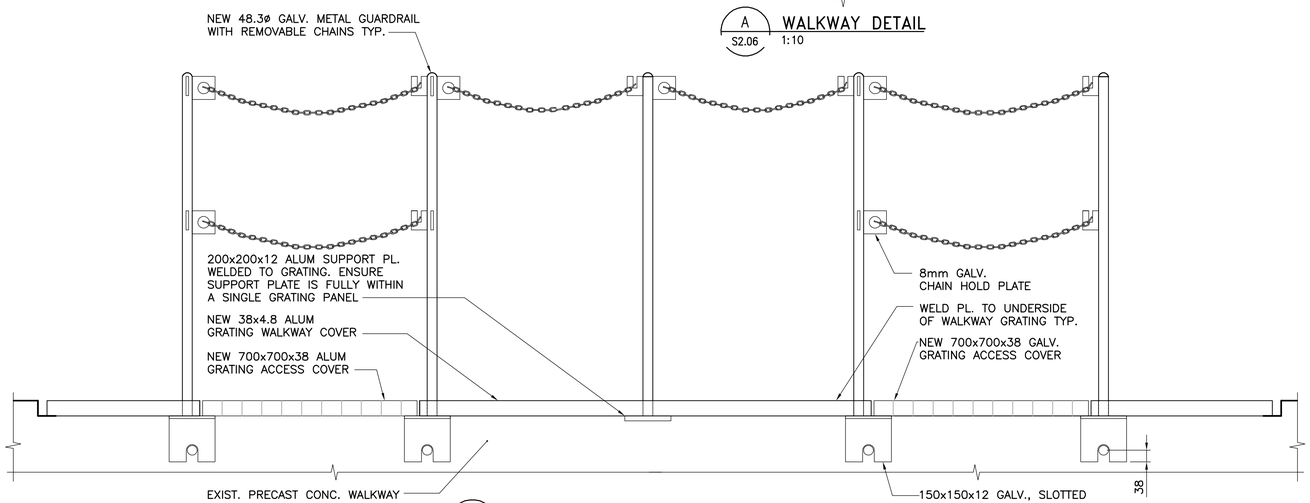

B S2.06 WALKWAY DETAIL
1:10

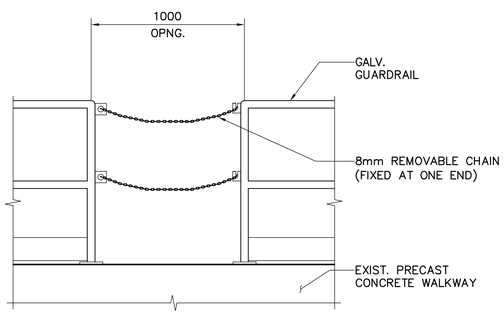

F S1.02 GUARDRAIL w/REMOVABLE CHAIN DETAIL
1:20

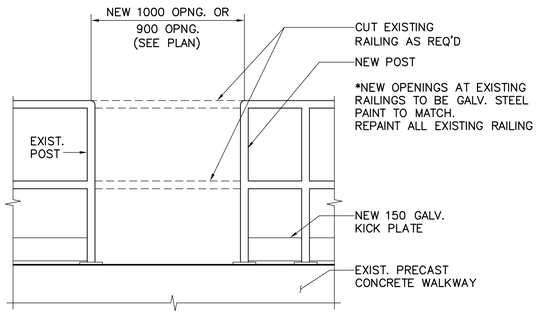

NOTE:
NEW OPENINGS IN EXISTING GUARD RAILING SHALL BE LOCATED SUCH THAT ONE SIDE OF THE NEW OPENING IS AT AN EXISTING VERTICAL POST LOCATION.

E S1.02 DETAIL – GUARDRAIL AT EXISTING
1:20

LOCATION APPROVED
UNDERGROUND STRUCTURES

SUPV. U/G STRUCTURES COMMITTEE — DATE

NOTE:
LOCATION OF UNDERGROUND STRUCTURES AS SHOWN ARE BASED ON THE BEST INFORMATION AVAILABLE, BUT NO GUARANTEE IS GIVEN THAT ALL EXISTING UTILITIES ARE SHOWN OR THAT THE GIVEN LOCATIONS ARE EXACT. CONFIRMATION OF EXISTENCE AND EXACT LOCATION OF ALL SERVICES MUST BE OBTAINED FROM THE INDIVIDUAL UTILITIES BEFORE PROCEEDING WITH CONSTRUCTION.

B.M.
ELEV.

NO.	REVISIONS	DATE	BY
00	ISSUED FOR TENDER	07/03/07	CMF

EarthTech
A Tyco International Ltd. Company

DESIGNED BY	GGP	CHECKED BY	LLR
DRAWN BY	CMF	APPROVED BY	H.H.
HOR. SCALE:	AS NOTED	RELEASED FOR CONSTRUCTION BY:	K. MARTENS
VERTICAL SCALE:			
DATE	2006/10/31	DATE	2007/03/07

ENGINEER'S SEAL
ORIGINAL SIGNED BY
L.L. RIDING
2007/03/07

CONSULTANT DRAWING NO.
S2.06

Winnipeg
THE CITY OF WINNIPEG
WATER AND WASTE DEPARTMENT
ENGINEERING DIVISION

NEWPCC
GRIT HANDLING UPGRADES
CONTRACT 1

STRUCTURAL
WALKWAY COVER DETAILS

CITY FILE NUMBER
SHEET OF
CITY DRAWING NUMBER

Last Save: 2007-03-07 11:14 AM

L:\WORK\88000\88648\02A-CAD\IND\CONTR\GRIT REMOVAL C1\S2.06.DWG