SHEET: COW-A1 (05/2005)

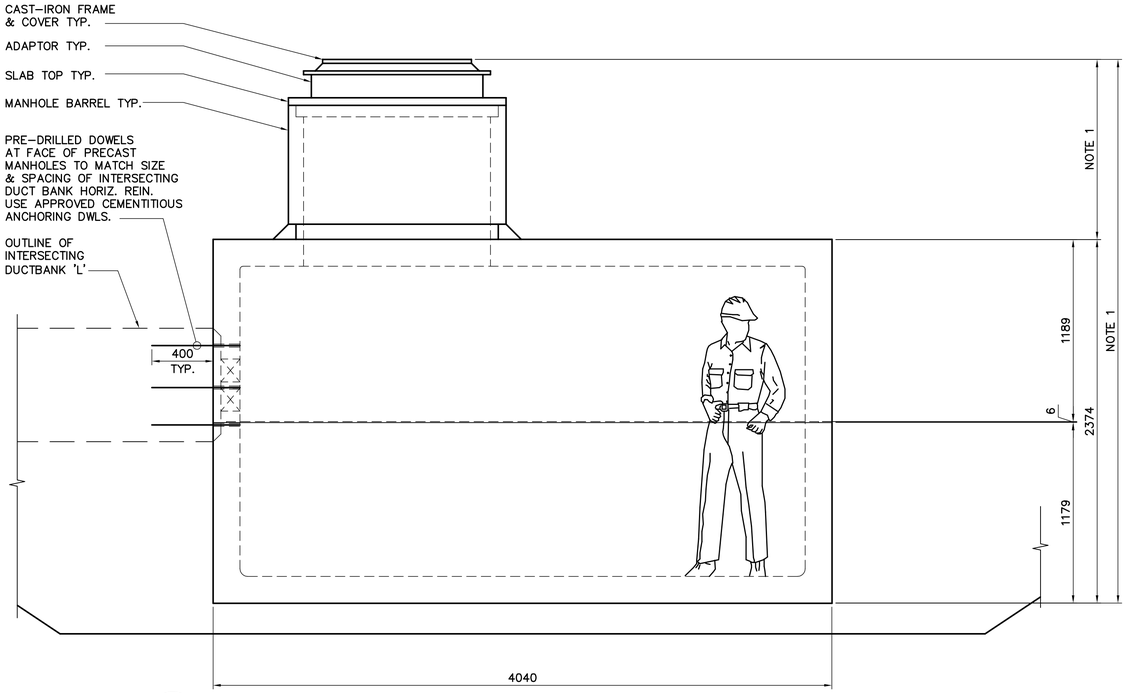

1 ELEVATION
WS-S0400.1 1:40

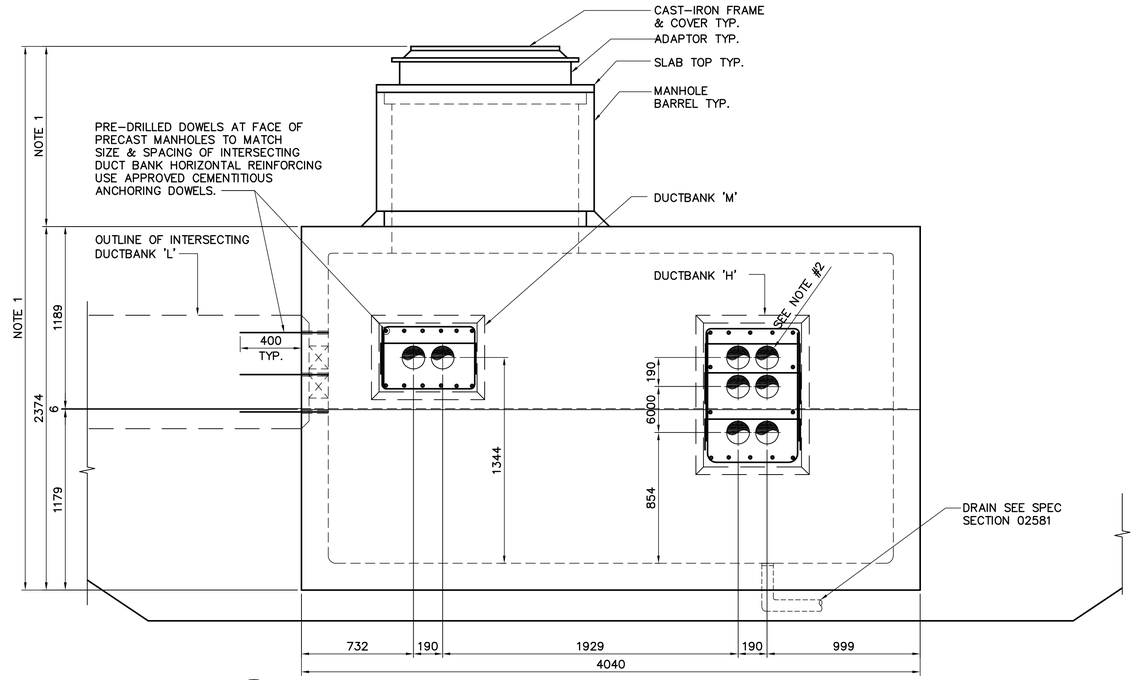

2 ELEVATION
WS-S0400.1 1:40

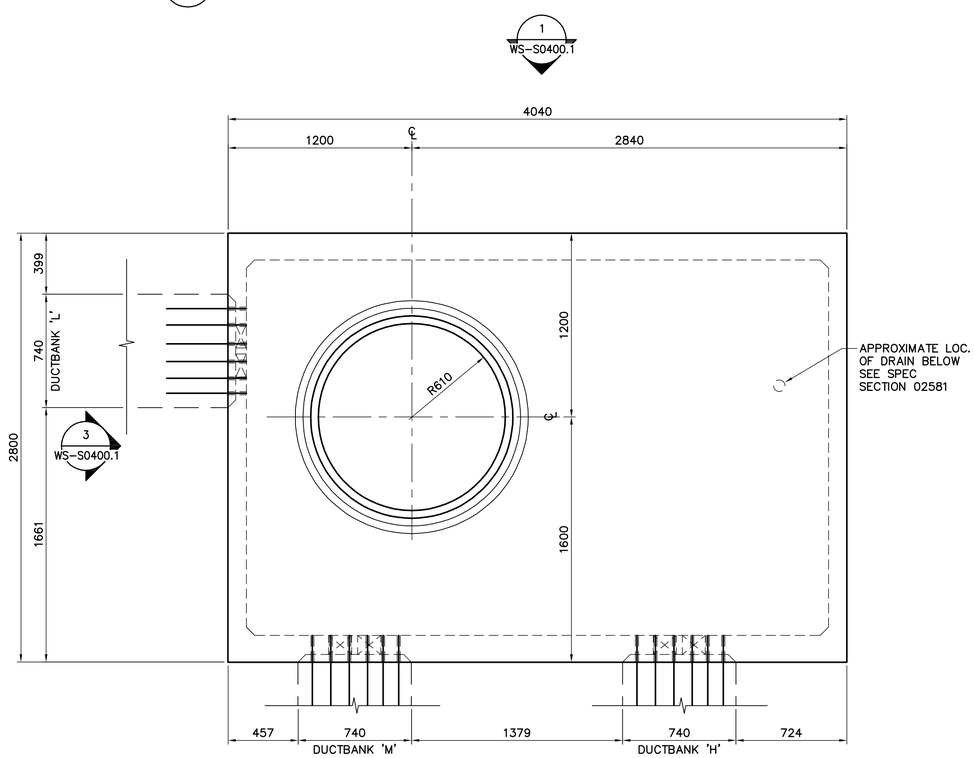

PLAN VIEW
SCALE: 1:40

2
WS-S0400.1

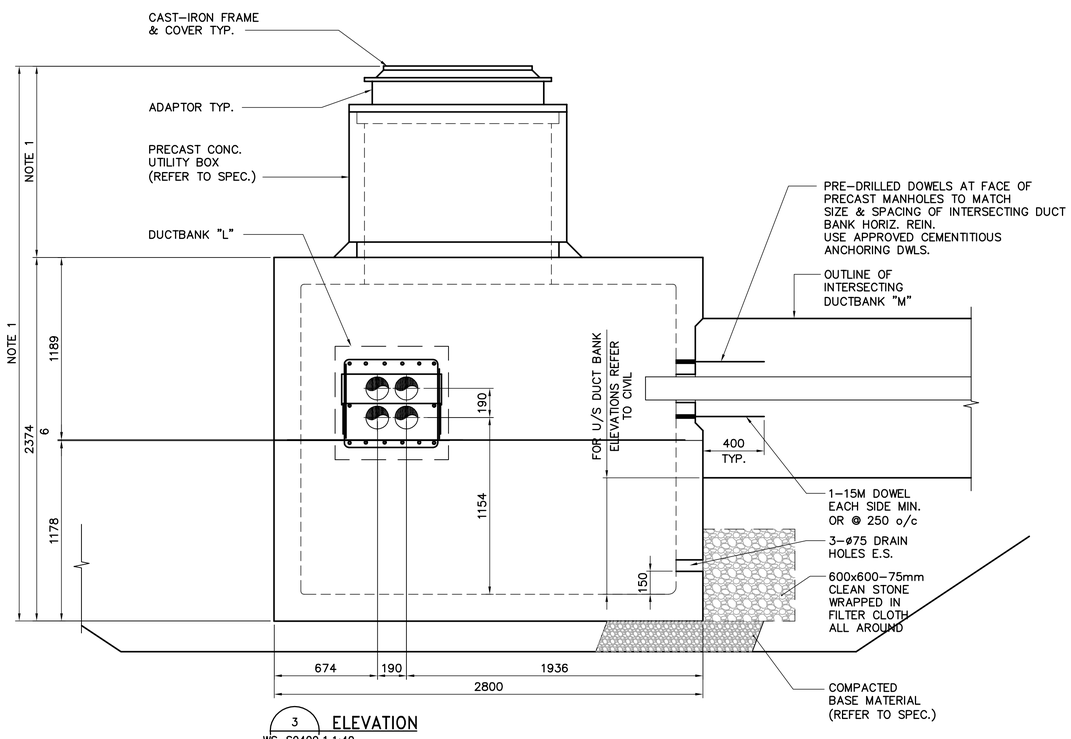

3 ELEVATION
WS-S0400.1 1:40

NOTES:

1. LENGTH TO SUIT RIM ELEVATION & BOTTOM OF MANHOLE ELEVATION.
2. HOLES IN UTILITY BOX TO ALLOW PASSAGE OF ø150 I.D DB2 ENT. DUCTS.

APEGM
Certificate of Authorization
Earth Tech Canada Inc.
No. 730 Expiry: April 30, 2007

NO.	REVISIONS	DATE	BY
00	ISSUED FOR TENDER	07/01/31	WDB

B.M. ELEV.

CH2MHILL
Frederickson Cooper ARCHITECTS
EarthTech A Tyco International Ltd. Company

DESIGNED BY	EC	CHECKED BY	AP
DRAWN BY	WDB	APPROVED BY	AHL
SCALE:	AS NOTED	RELEASED FOR CONSTRUCTION BY:	R. SOROKOWSKI
DATE	2006/12/21	DATE	2007/01/31

ENGINEER'S SEAL
ORIGINAL SIGNED BY
A. POCHANART
2007/01/31

CONSULTANT DRAWING NO.
WS-S0411

Winnipeg
THE CITY OF WINNIPEG
WATER AND WASTE DEPARTMENT
ENGINEERING DIVISION

WATER TREATMENT PLANT
BULK CHEMICAL BUILDING
SODIUM HYPOCHLORITE AND CHEMICAL STORAGE BUILDING

STRUCTURAL
DUCT BANK PLAN AND DETAILS

CITY FILE NUMBER
SHEET OF
CITY DRAWING NUMBER
1-06018-A-S0411-001-00D