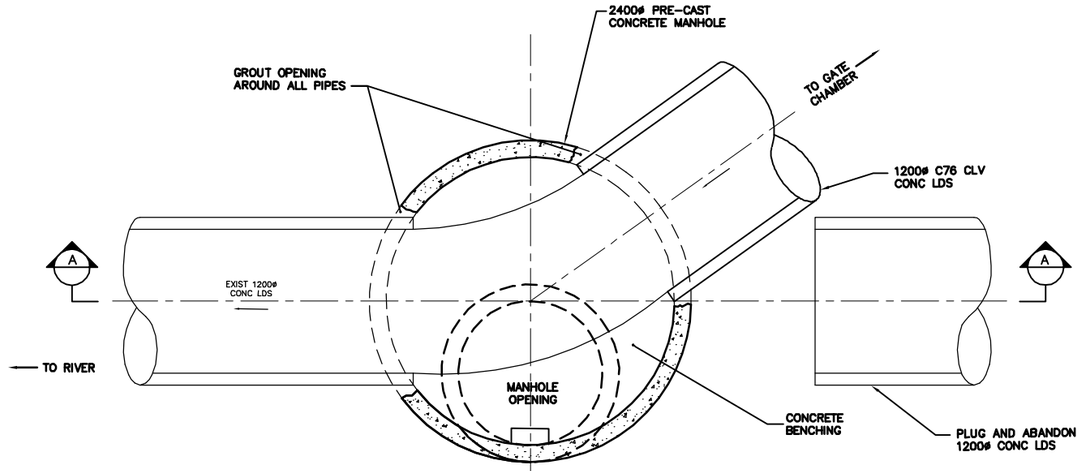

PLAN AT ELEV. 227.50
SCALE: 1:25

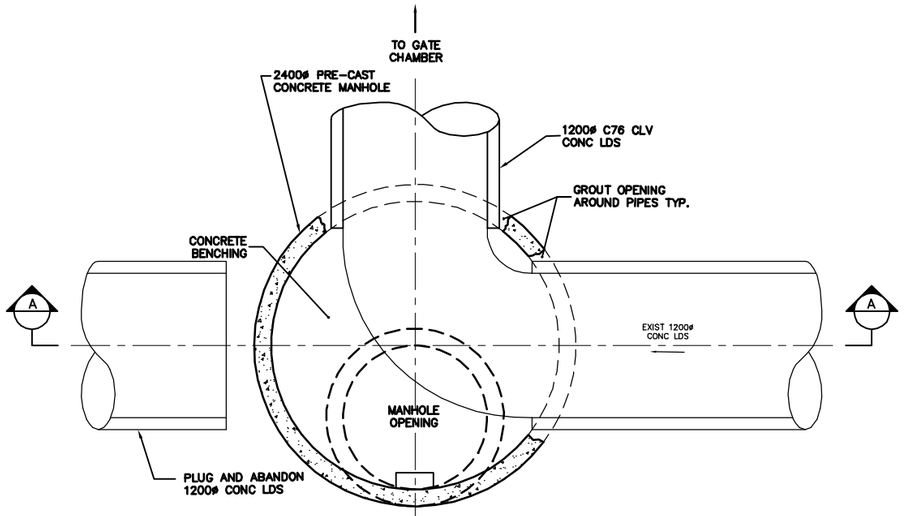

PLAN AT ELEV. 227.50
SCALE: 1:25

CONSTRUCTION NOTES:

1. CONFIRM SIZE, LOCATION AND ELEVATION OF EXISTING LDS BEFORE INSTALLING MANHOLES.

2. INSTALL MANHOLES IN ACORDANCE WITH CW 2130 AND SD-010

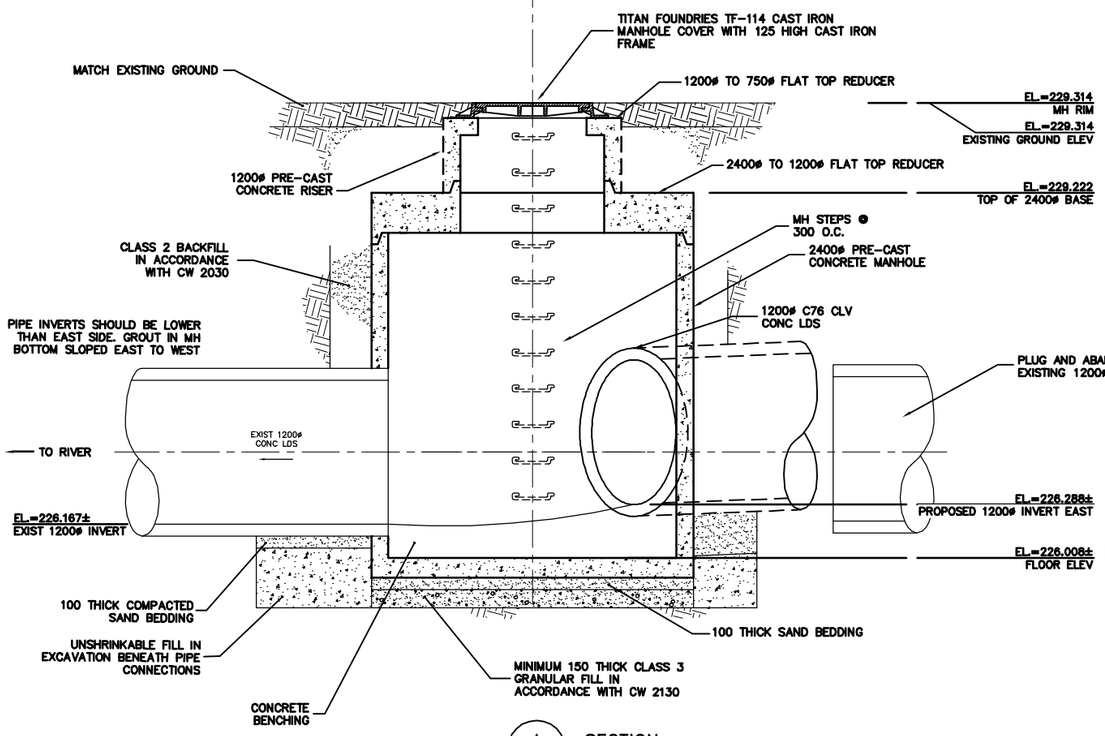

A SECTION
1:25

2400ø MH AT STATION 1+96.28

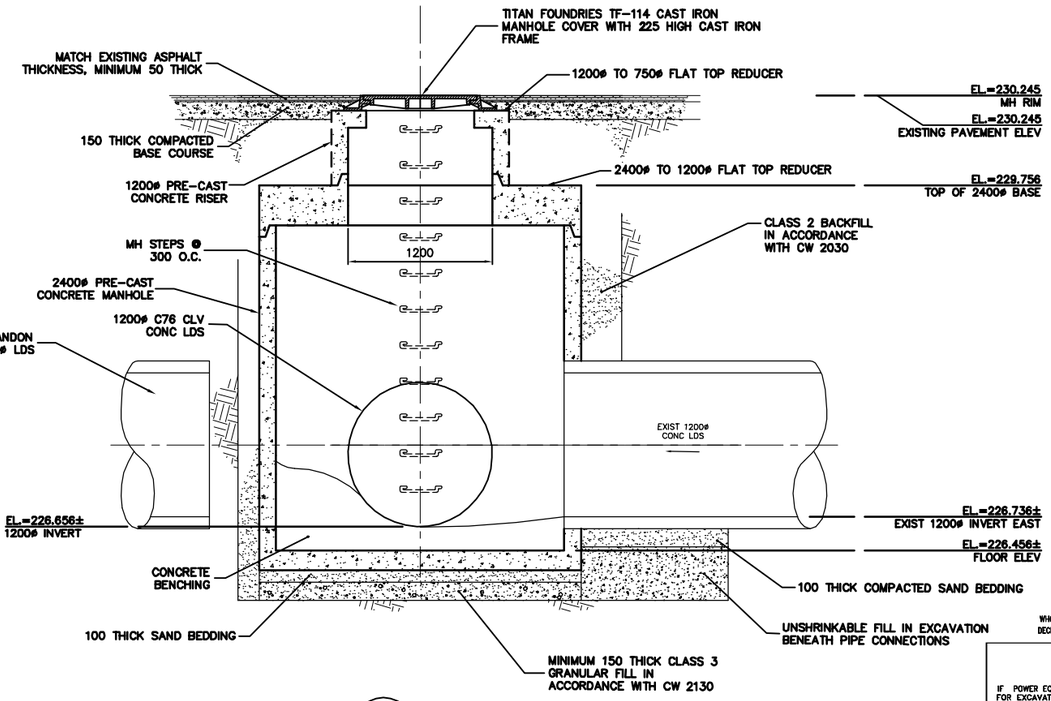

A SECTION
1:25

2400ø MH AT STATION 2+17.61

METRIC
WHOLE NUMBERS INDICATE MILLIMETRES
DECIMALIZED NUMBERS INDICATE METRES

WARNING

IF POWER EQUIPMENT OR EXPLOSIVES ARE TO BE USED FOR EXCAVATION ON THIS PROJECT THE CONTRACTOR MUST:
1) NOTIFY THE GAS COMPANY OF THE PROPOSED LOCATION OF EXCAVATION.
2) TAKE PRECAUTION TO AVOID DAMAGE TO GAS COMPANY INSTALLATIONS.

SEE PROVINCIAL REGULATION 210/72 FOR DETAILS

0 500 1000 1500 2000 2500

EXISTING	LEGEND-PLAN	PROPOSED	EXISTING	LEGEND-PLAN	PROPOSED	EXISTING	LEGEND-PROFILE	PROPOSED
200 WM	WATERMAIN	200 WM		SL , HYDRO		150 WM	WATERMAIN	150 WM
	HYDRANT			MTS			HYDRANT	
	VALVE			TRAFFIC SIGNALS			VALVE	
525 LDS	LAND DRAINAGE SEWER	525 LDS	50 GAS	GAS	50 GAS	300 LDS	LAND DRAINAGE SEWER	300 LDS
375 WWS	WASTEWATER SEWER	375 WWS		SURVEY BAR		250 WWS	WASTEWATER SEWER	250 WWS
	MANHOLE			FENCE			℄ PROFILE	
	CATCH BASIN			POLE - HYDRO, MTS			GROUND ABOVE PIPE	
	CURB INLET			CURB STOP			? DITCH (SOUTH & EAST)	
	JUNCTIONS			GUY ANCHOR			GUTTER (NORTH & WEST)	
	CULVERT			LIGHT STANDARD				
	ANODE			TREE				

LOCATION APPROVED
UNDERGROUND STRUCTURES

SUPV. U/G STRUCTURES COMMITTEE DATE

NOTE:

LOCATION OF UNDERGROUND STRUCTURES AS SHOWN ARE BASED ON THE BEST INFORMATION AVAILABLE BUT NO GUARANTEE IS GIVEN THAT ALL EXISTING UTILITIES ARE SHOWN OR THAT THE GIVEN LOCATIONS ARE EXACT. CONFIRMATION OF EXISTENCE AND EXACT LOCATION OF ALL SERVICES MUST BE OBTAINED FROM THE INDIVIDUAL UTILITIES BEFORE PROCEEDING WITH CONSTRUCTION.

B.M. ELEV.
FIELD BOOK #:
POSTED TO LBIS

NO.	REVISIONS	DATE	BY

CITY OF WINNIPEG
WATER AND WASTE
ENGINEERING DIVISION

DESIGNED BY	DGS	CHECKED BY	TW
DRAWN BY	CJH/PB	APPROVED BY	KZ
HOR. SCALE	AS	RELEASED FOR CONSTRUCTION	
VERTICAL	SHOWN		
DATE	2006.07.27	DATE	

ENGINEER'S SEAL

ORIGINAL SIGNED BY K.R. ZUREK 06/07/28

BID OPPORTUNITY: 505-2006
FILENAME : LD-3182A.dwg
PLOT DATE: 2006 07 28

Winnipeg

THE CITY OF WINNIPEG
WATER AND WASTE DEPARTMENT

2006 OUTFALL GATE CHAMBER CONSTRUCTION

BLACKMORE AVENUE

LDS OUTFALL GATE CHAMBER MANHOLE DETAILS

SHEET 5 OF 12

CITY DRAWING NUMBER

LD-3182A