D SIZE 22" x 34" (559mm x 864mm)

PLOT: 06/03/11 1:25:56 PM

UMA FILE NAME: D265-177-02_01-C-4001_RX.dwg Saved By: dlane

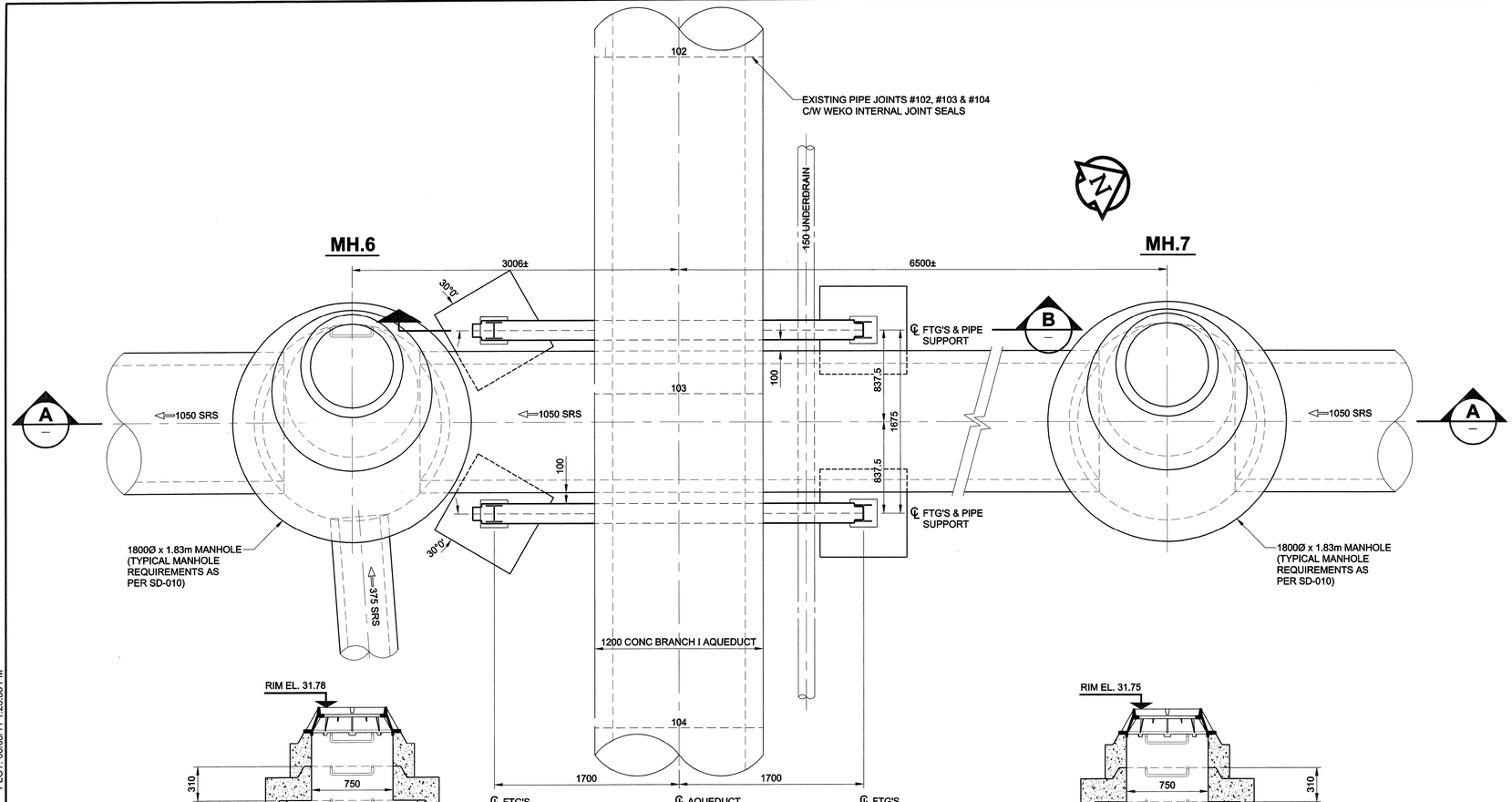

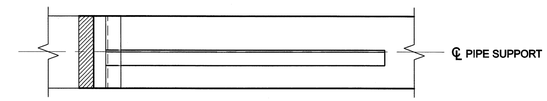

PLAN

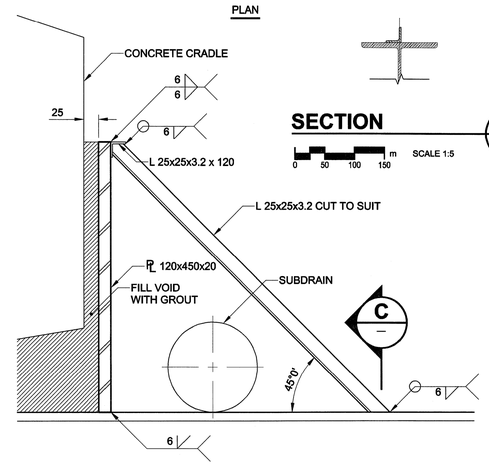

SECTION C

m SCALE 1:5
0 50 100 150

DETAIL 1

m SCALE 1:5
0 50 100 150

LATERAL SUPPORT

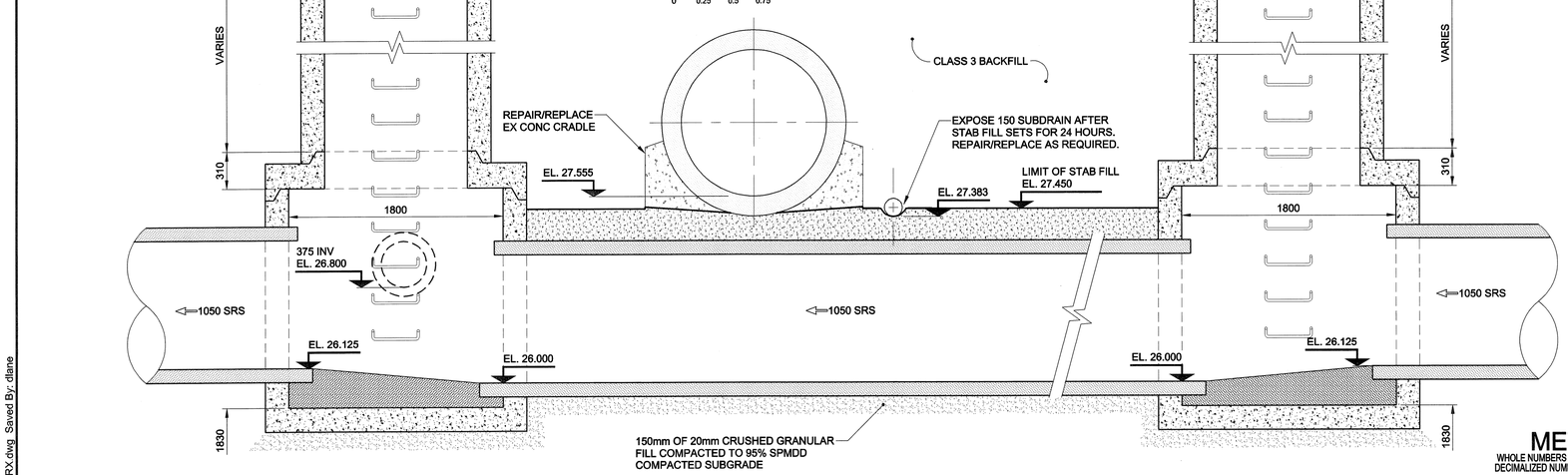

SECTION A

mm SCALE 1:25
0 250 500 750

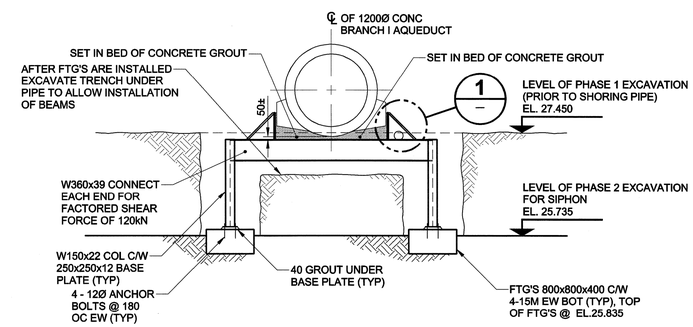

SECTION B

mm SCALE 1:50
0 500 1000 1500

METRIC
WHOLE NUMBERS INDICATE MILLIMETRES
DECIMALIZED NUMBERS INDICATE METRES

APEGM
Certificate of Authorization
UMA Engineering Ltd.
No. 256 Expiry: April 30, 2006

BID OPPORTUNITY NO. 132-2006

LOCATION APPROVED
UNDERGROUND STRUCTURES

SUPR. U/G STRUCTURES COMMITTEE DATE

NOTE:
LOCATION OF UNDERGROUND STRUCTURES AS SHOWN ARE BASED ON THE BEST INFORMATION AVAILABLE. BUT NO GUARANTEE IS GIVEN THAT ALL EXISTING UTILITIES ARE SHOWN OR THAT THE GIVEN LOCATIONS ARE EXACT. CONFIRMATION OF EXISTENCE AND EXACT LOCATION OF ALL SERVICES MUST BE OBTAINED FROM THE INDIVIDUAL UTILITIES BEFORE PROCEEDING WITH CONSTRUCTION.

BM 36-009 Tbl. in W. wall of the City of Winnipeg Public Works Shops, S.E. Cor. of Pacific Ave. & Tecumseh St., 0.6m S. of N.W. Cor. of Bldg.
ELEV 232.501m

NO.	REVISIONS	YY/MM/DD	BY
0	ISSUED FOR CONSTRUCTION	06/03/08	ADL

UMA | AECOM

© 2005 UMA ENGINEERING LTD. ALL RIGHTS RESERVED.

DESIGNED BY	GEB	CHECKED BY	
DRAWN BY	ADL	APPROVED BY	
HOR. SCALE	AS NOTED	RELEASED FOR CONSTRUCTION	
VERT. SCALE	N/A		
DATE	06/03/14	DATE	March 14/06

PROFESSIONAL SEAL
PROVINCE OF MANITOBA
A. NAGY
March 13, 2006
REGISTERED PROFESSIONAL ENGINEER

CONSULTANT DRAWING NO. 17
D265-177-01-02

Winnipeg

THE CITY OF WINNIPEG
WATER AND WASTE DEPARTMENT

ALEXANDER/BANNATYNE
COMBINED SEWER RELIEF
CONTRACT 2A

BRANCH I AQUEDUCT UNDERCROSSING

PACIFIC AVENUE AT SHERBROOK STREET

SHEET 17 OF 21

CITY DRAWING NUMBER
LD-3311
REV 0