A1 SIZE 23.4" x 33.1" (594mm x 841mm)

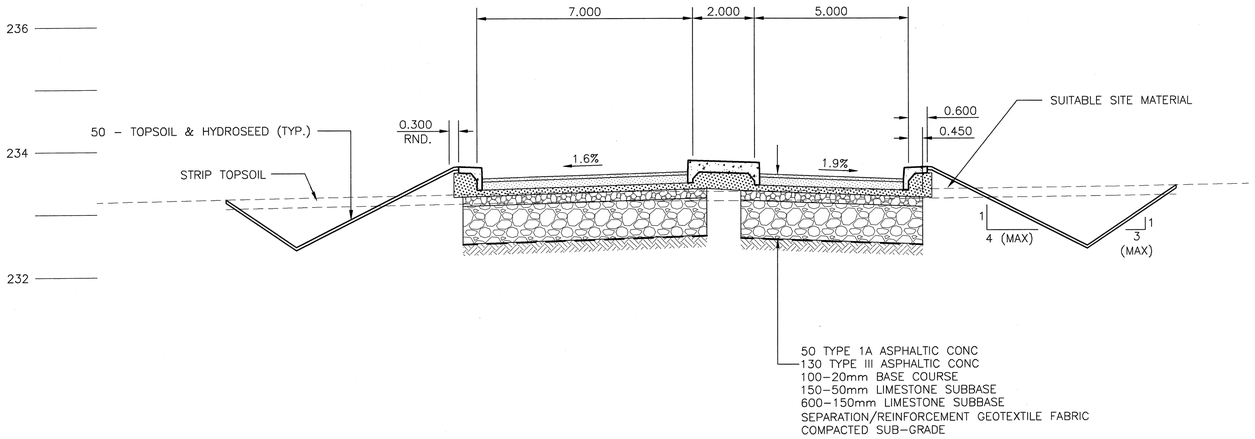

M
17 | 46

CLARKE TRANSPORT ACCESS ROAD
SECTION @ STA. 0+540

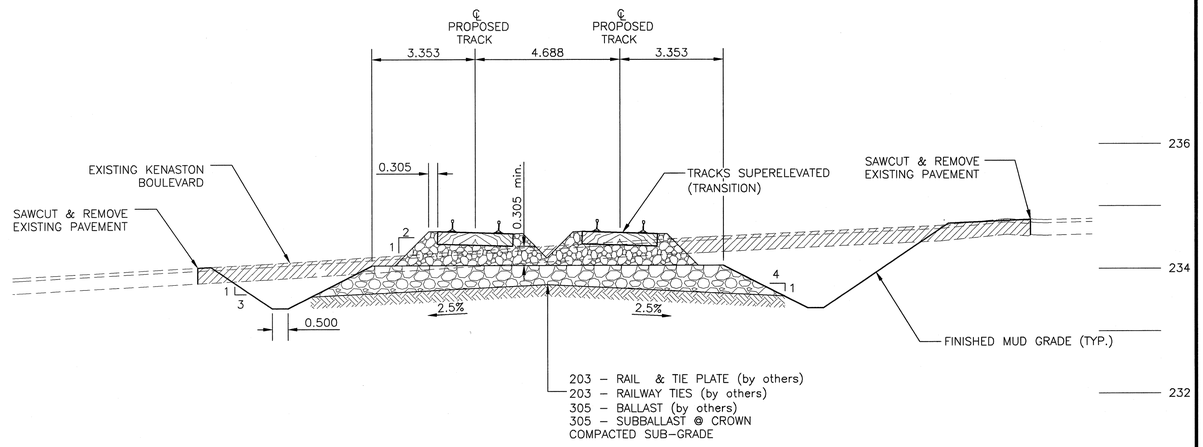

O
39 | 46

CN RAIL MAINLINE DETOUR
SECTION @ STA. 0+910

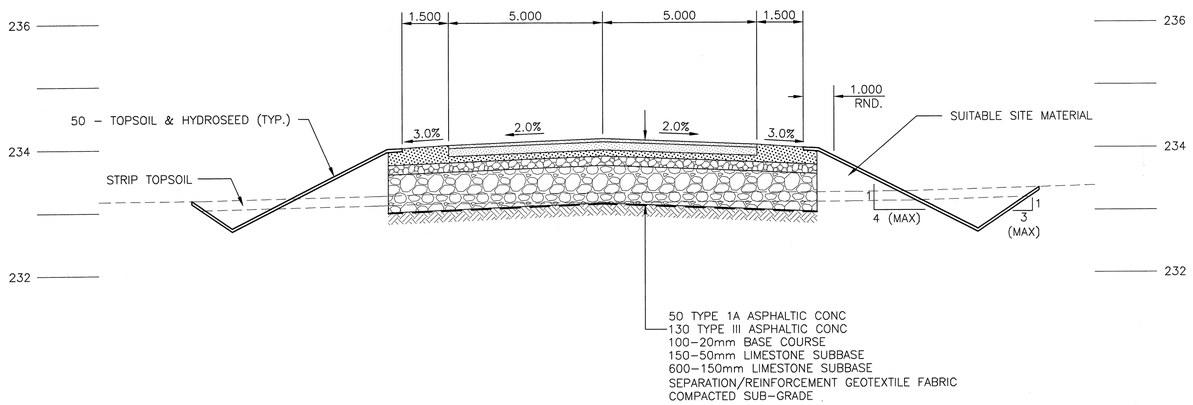

N
17 | 46

CLARKE TRANSPORT ACCESS ROAD
SECTION @ STA. 0+640

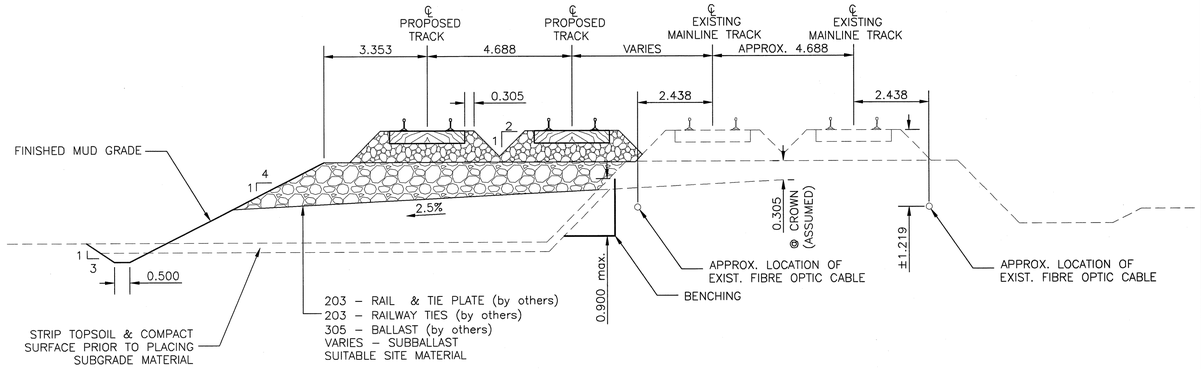

P
46 | 46

CN RAIL MAINLINE DETOUR
TYPICAL TRACK SECTION– BENCHING

BID OPPORTUNITY
No. 84–2005

APEGM
Certificate of Authorization
UMA Engineering Ltd.
No. 256 Expiry: April 30, 2005

METRIC

WHOLE NUMBERS INDICATE MILLIMETRES
DECIMALIZED NUMBERS INDICATE METRES

WARNING

IF POWER EQUIPMENT OR EXPLOSIVES ARE TO BE USED FOR EXCAVATION ON THIS PROJECT THE CONTRACTOR MUST:
1) NOTIFY THE GAS COMPANY OF THE PROPOSED LOCATION OF EXCAVATION.
2) TAKE PRECAUTION TO AVOID DAMAGE TO GAS COMPANY INSTALLATIONS.
SEE PROVINCIAL REGULATION 140/92 FOR DETAILS

LOCATION APPROVED
UNDERGROUND STRUCTURES

SUPV. U/G STRUCTURES COMMITTEE — DATE

NOTE:
LOCATION OF UNDERGROUND STRUCTURES AS SHOWN ARE BASED ON THE BEST INFORMATION AVAILABLE BUT NO GUARANTEE IS GIVEN THAT ALL EXISTING UTILITIES ARE SHOWN OR THAT THE GIVEN LOCATIONS ARE EXACT. CONFIRMATION OF EXISTENCE AND EXACT LOCATION OF ALL SERVICES MUST BE OBTAINED FROM THE INDIVIDUAL UTILITIES BEFORE PROCEEDING WITH CONSTRUCTION.

B.M. GBM67–002
ELEV. 233.951

NO.	REVISIONS	DATE	BY
0	ISSUED FOR CONSTRUCTION	05/04/19	DL
A	ISSUED FOR CLIENT REVIEW	05/02/28	CGC

uma
An AECOM Company

2005 UMA ENGINEERING LTD. ALL RIGHTS RESERVED.

DESIGNED BY	RPB,JGK	CHECKED BY	RPB
DRAWN BY	JGK,CGC	APPROVED BY	BLG
HOR. SCALE:	1:100	AUTHORIZED BY:	DATE
VERTICAL:	1:50	R. FINGAS, P.ENG BRIDGE PROJECTS ENGINEER	05-04-19
DATE	05/04/19		

ENGINEER'S SEAL
PROVINCE OF MANITOBA
BRUCE W. BIGLOW
05-04-13
REGISTERED PROFESSIONAL ENGINEER

CONSULTANT DRAWING NO.
4231-040-01-46

Winnipeg

THE CITY OF WINNIPEG
PUBLIC WORKS DEPARTMENT
ENGINEERING DIVISION

KENASTON UNDERPASS PROJECT
STERLING LYON PARKWAY /
CN RIVERS SUBDIVISION RAIL DETOUR

CLARKE TRANSPORT / CN MAINLINE DETOUR
PAVEMENT CROSS SECTIONS

SHEET 46 OF 61
CAD FILE DRAWING NUMBER 01-CT3006_RX
CITY DRAWING NUMBER P-3258-106

PLOT: 05/04/12 8:29:43 AM
UMA FILE NAME: 4231-040-01_01-CT3006_RX.dwg Saved By: ddoszpod