SHEET: COW-A1 (05/2005)

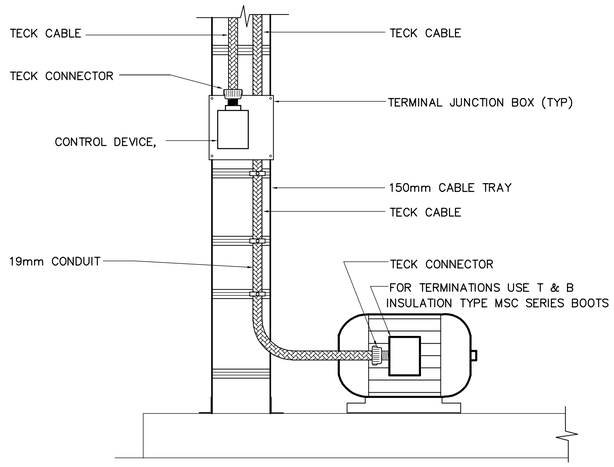

1 – TYPICAL MOTOR CONNECTION DETAIL
N.T.S.

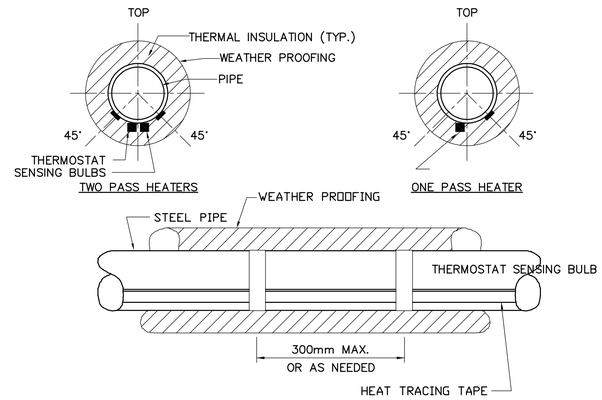

2 – ABOVE GROUND HEAT TRACING DETAIL
N.T.S.

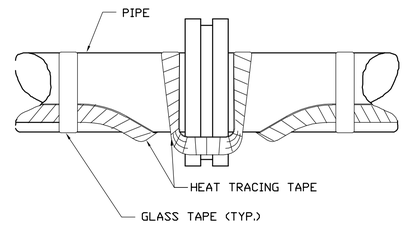

3 – BURRIED PIPE HEAT TRACING DETAIL
N.T.S.

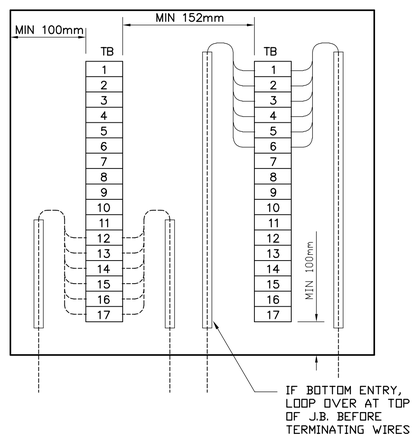

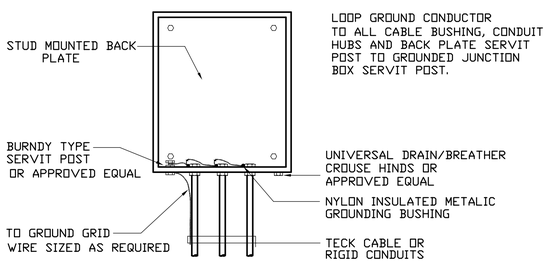

4 – STANDARD TERMINAL JUNCTION BOX DETAIL
N.T.S.

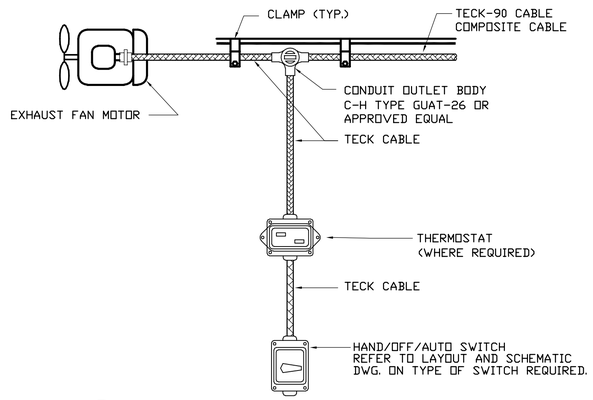

5 – EXHAUST FAN THERMOSTATE CONNECTION DETAIL
N.T.S.

APEGM
Certificate of Authorization
CH2M HILL Canada Ltd.
No. 1441 Expiry: April 30, 2006

B.M.
ELEV.

NO.	REVISIONS	DATE	BY
00	ISSUED FOR TENDER	06/03/29	LL

CH2MHILL
Fredericksen Cooper ARCHITECTS
EarthTech A Tyco International Ltd. Company

DESIGNED BY	LL	CHECKED BY	ND
DRAWN BY	TL	APPROVED BY	AHL
SCALE:	AS SHOWN	RELEASED FOR CONSTRUCTION BY:	R. SOROKOWSKI
DATE	2006/03/13	DATE	2006/03/29

ENGINEER'S SEAL
ORIGINAL
SIGNED BY
L.D. LLEWELLYN
2006/03/29

CONSULTANT DRAWING NO.
WB-E0457

Winnipeg
THE CITY OF WINNIPEG
WATER AND WASTE DEPARTMENT
ENGINEERING DIVISION

WATER TREATMENT PLANT
MAIN BUILDING
MECHANICAL AND ELECTRICAL

ELECTRICAL

STANDARD DETAILS

CITY FILE NUMBER
SHEET OF
CITY DRAWING NUMBER
1-0601B-A-E0457-001-00D

Last Save: 2006-03-27 6:32 PM
C:\DOCUMENTS AND SETTINGS\SEVERITT\MY DOCUMENTS\NDMPROJ\321352 - WINNIPEGWTP\DN_WB-E0457_CH2M.DWG