SHEET: COW-A1 (05/2005)

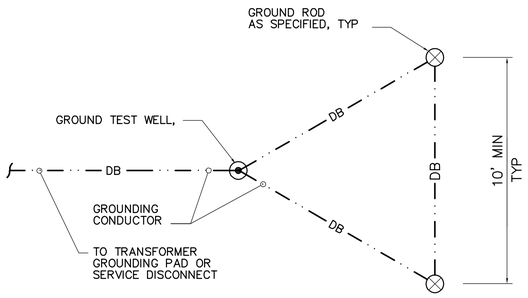

1 – TYPICAL GROUND TRIANGLE DETAIL
N.T.S.

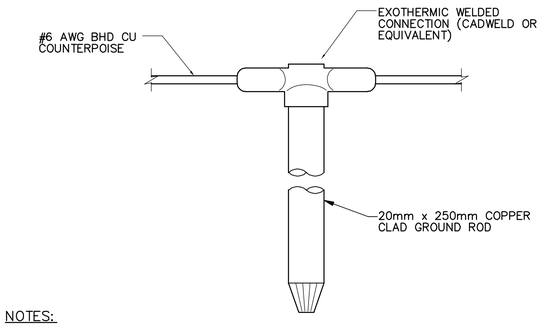

NOTES:

1. TOP OF GROUND ROD SHALL BE SAND BEDDED 150mm MIN BELOW GRADE.
2. CONNECTIONS TO EXISTING COUNTERPOISE SHALL BE CADWELD OR EQUIVALENT.

8 – TYPICAL GROUND ROD CONNECTION DETAIL
N.T.S.

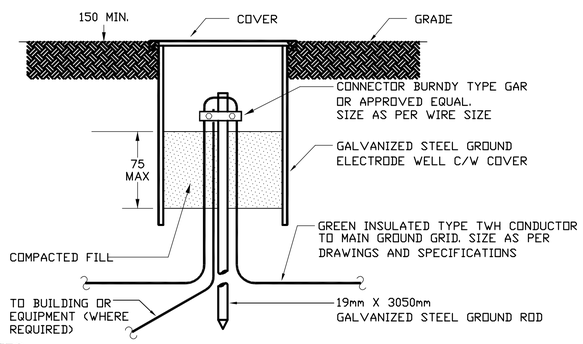

NOTES

1. BARE COPPER CONNECTIONS SHALL BE COATED WITH SILICONE.
2. LOCATE ROD OFF CENTRE TO FACILITATE WORKING SPACE.

6 – TYPICAL GROUND WELL DETAIL
N.T.S.

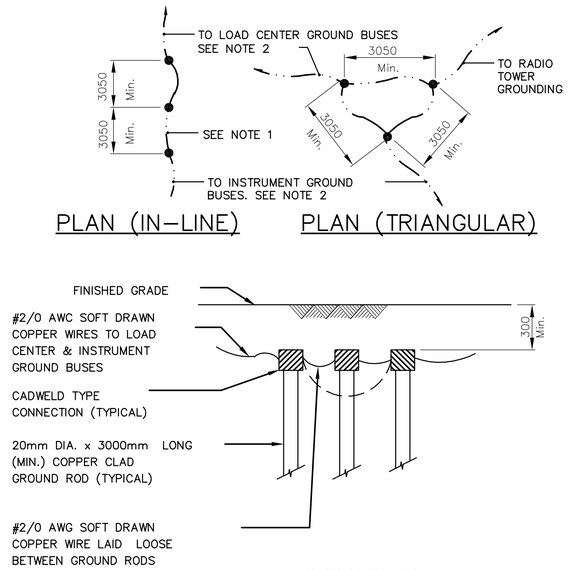

NOTES:

1. ADDITIONAL GROUND RODS MAY BE REQUIRED ACCORDING TO LOCAL CONDITIONS. THESE SHALL BE SPACED A MINIMUM OF 3050mm FROM REMAINING RODS.
2. CONNECTION TO GROUND BUS SHALL BE MADE WITH COMPRESSION TYPE CONNECTOR AS APPROVED BY ENGINEER.

2 – TYPICAL GROUNDING CLUSTER DETAIL
N.T.S.

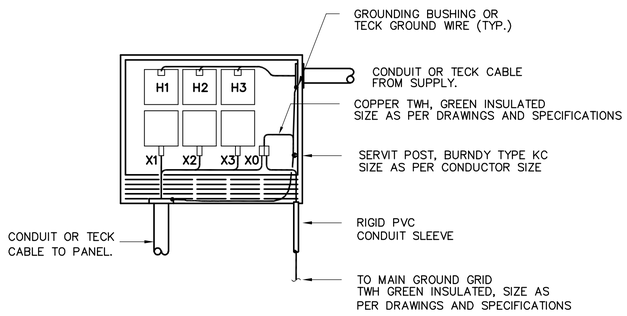

7 – TYPICAL DISTRIBUTION TRANSFORMER GROUNDING DETAIL
N.T.S.

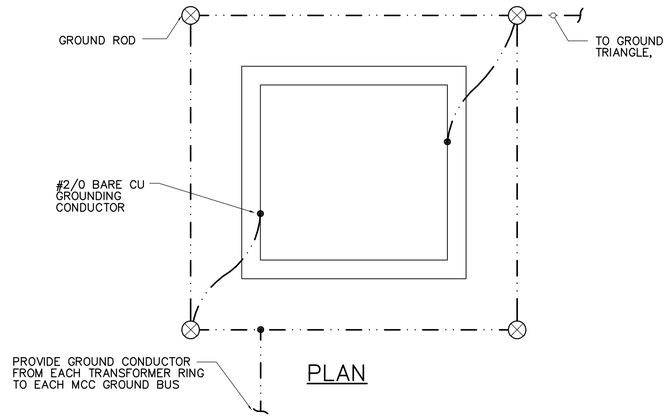

3 – PAD MOUNT TRANSFORMER & SWITCHGEAR DETAIL
N.T.S.

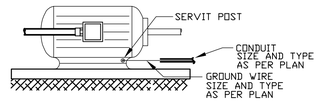

4 – TYPICAL MOTOR GROUNDING DETAIL
N.T.S.

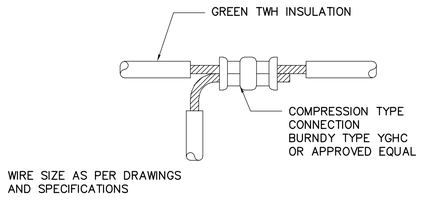

NOTE:

SPRAY CONNECTION WITH GLYPTAL, WRAP WITH TWO LAYERS OF RUBBER TAPE AND TWO LAYERS OF SCOTCH 88 TAPE.

5 – TYPICAL GROUND TAP DETAIL
NTS

APEGM
Certificate of Authorization
CH2M HILL Canada Ltd.
No. 1441 Expiry: April 30, 2006

B.M.
ELEV.

NO.	REVISIONS	DATE	BY
00	ISSUED FOR TENDER	06/03/29	LL

CH2MHILL
Frederickson Cooper ARCHITECTS
EarthTech A Tyco International Ltd. Company

DESIGNED BY	LL	CHECKED BY	ND
DRAWN BY	TL	APPROVED BY	AHL
SCALE:	AS SHOWN	RELEASED FOR CONSTRUCTION BY:	R. SOROKOWSKI
DATE	2006/03/02	DATE	2006/03/29

ENGINEER'S SEAL
ORIGINAL SIGNED BY
L.D. LLEWELLYN
2006/03/29

CONSULTANT DRAWING NO.
WB-E0456

Winnipeg
THE CITY OF WINNIPEG
WATER AND WASTE DEPARTMENT
ENGINEERING DIVISION

WATER TREATMENT PLANT
MAIN BUILDING
MECHANICAL AND ELECTRICAL

ELECTRICAL

STANDARD DETAILS

CITY FILE NUMBER
SHEET OF
CITY DRAWING NUMBER
1-0601B-A-E0456-001-00D