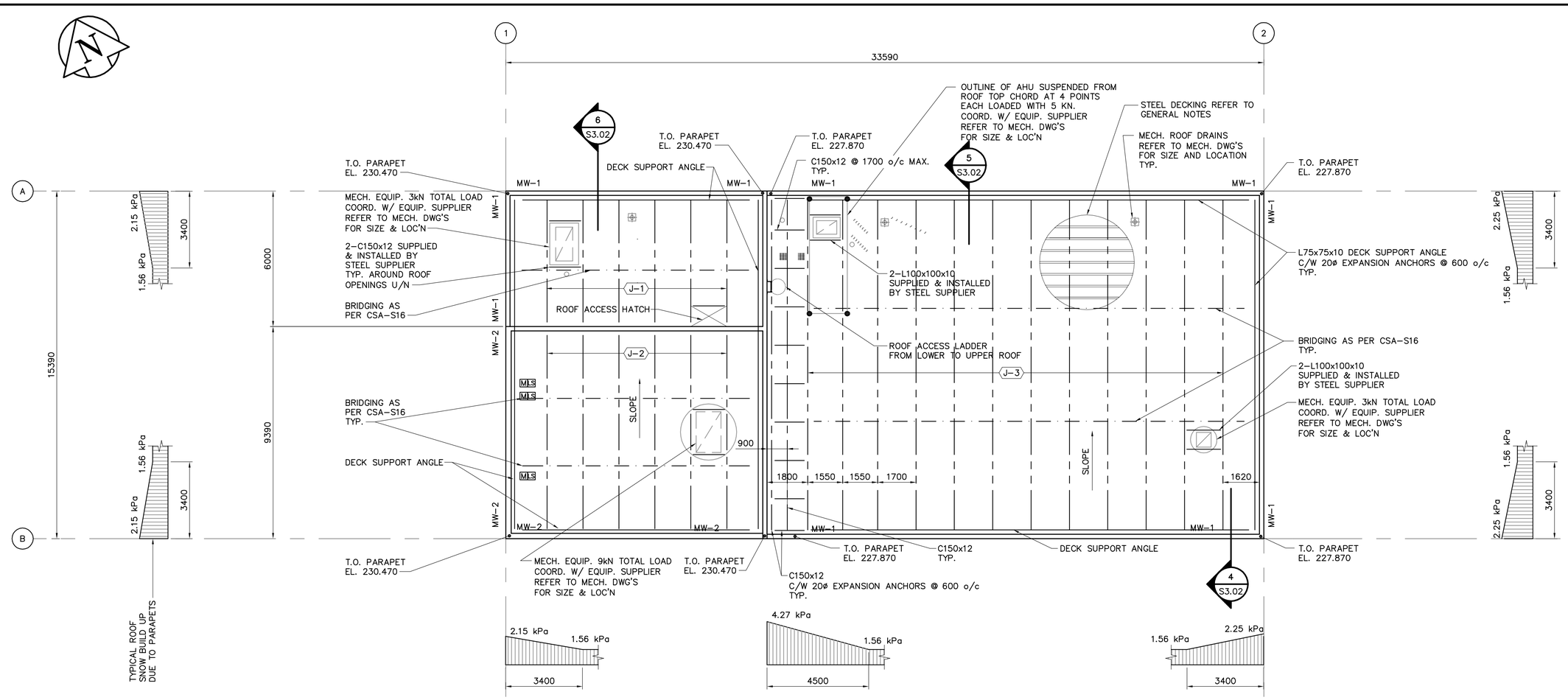

ROOF FRAMING PLAN

SCALE: 1:100

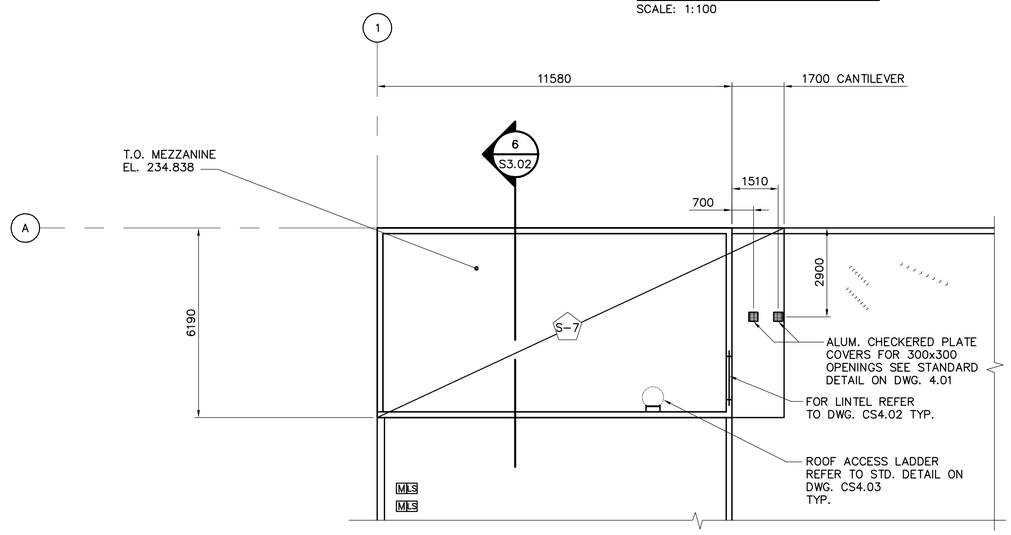

MEZZANINE FRAMING PLAN

SCALE: 1:100

NOTES:

1. FOR GENERAL NOTES AND SCHEDULES REFER TO DRAWING CS1.01.
2. FOR STANDARD DETAILS REFER TO DRAWINGS CS4.01, CS4.02, AND CS4.03.

APEGM
Certificate of Authorization
Earth Tech Canada Inc.
No. 730 Expiry: April 30, 2005

B.M.
ELEV.

NO.	REVISIONS	DATE	BY
0	ISSUED FOR TENDER	05/02/18	JEH

EARTH TECH
Earth Tech (Canada) Inc. Winnipeg, Manitoba 204.477.5381

DESIGNED BY	RE, MK	CHECKED BY	GGP
DRAWN BY	C.T.	APPROVED BY	DT
HOR. SCALE:	AS NOTED	RELEASED FOR CONSTRUCTION BY:	T. KJARTANSON
VERTICAL SCALE:	AS NOTED		
DATE	2004/11/04	DATE	2005-02-18

ENGINEER'S SEAL
ORIGINAL SIGNED BY
R.B. ERIC
FEB. 18/05

CONSULTANT DRAWING NO.
66303D-CS2.05

Winnipeg
THE CITY OF WINNIPEG
WATER AND WASTE DEPARTMENT

NEWPCC - SECONDARY EFFLUENT
UV DISINFECTION FACILITY

STRUCTURAL
ROOF AND MEZZANINE FRAMING PLANS

CITY FILE NUMBER
SHEET 6 OF 18
CITY DRAWING NUMBER

SHEET: CW-A1-WWD (11/2002)
Feb 21, 2005 - 12:50pm PLOTTED BY: jorge.ducharme LAYOUT: Layout1 FILE: L:\work\66000\66303D\s\02a-CAD\ALL\SUBMISSION\TENDER-PDF\CS2-05.dwg