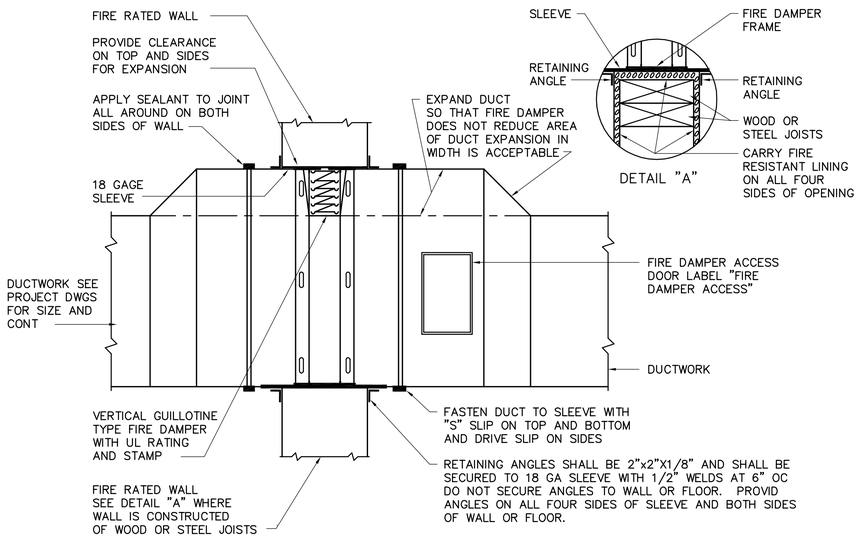

1 M7.05 TYPE 'B' FIRE DAMPER DETAIL
SCALE N.T.S.

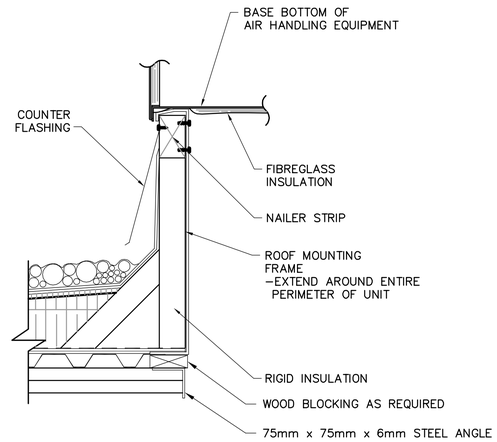

2 M7.05 FLASHING DETAIL FOR ROOF MOUNTING FRAME
SCALE N.T.S.

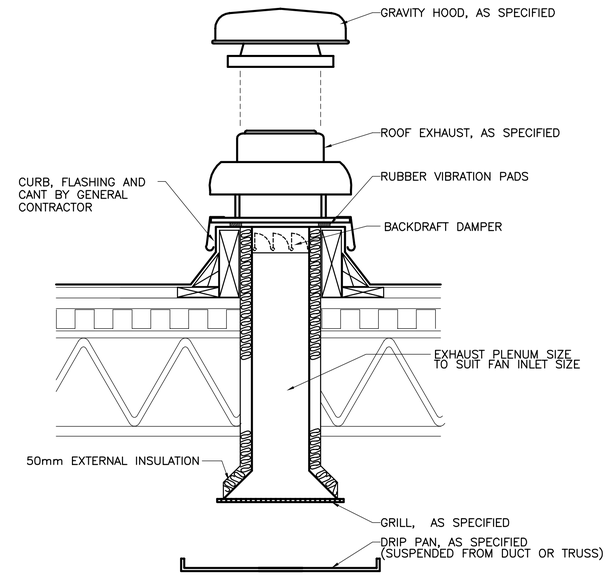

3 M7.05 ROOF–MOUNTED GRAVITY HOOD/ CENTRIFUGAL EXHAUST FAN
SCALE N.T.S.

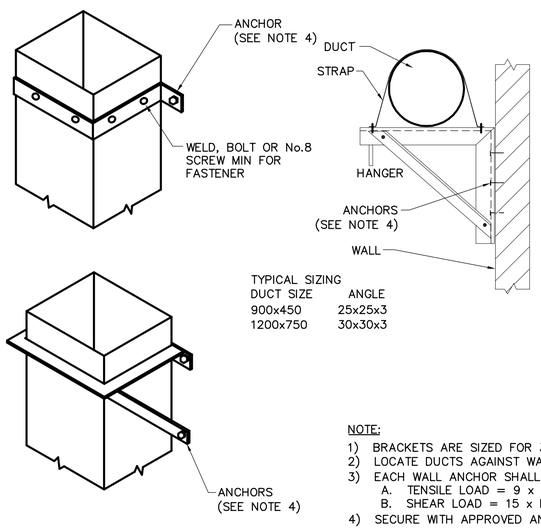

TYPICAL SIZING

DUCT SIZE	ANGLE
900x450	25x25x3
1200x750	30x30x3

NOTE:
1) BRACKETS ARE SIZED FOR 3600mm OF DUCT MAX
2) LOCATE DUCTS AGAINST WALL OR MAX OF 50mm AWAY FROM WALL
3) EACH WALL ANCHOR SHALL SATISFY THE FOLLOWING:
   A. TENSILE LOAD = 9 x DUCT WEIGHT; SAFETY FACTOR OF 4
   B. SHEAR LOAD = 15 x DUCT WEIGHT; SAFETY FACTOR OF 4
4) SECURE WITH APPROVED ANCHORS TO MATCH WALL CONSTRUCTION

4 M7.05 DUCT SUPPORTS FROM WALL DETAIL
SCALE N.T.S.

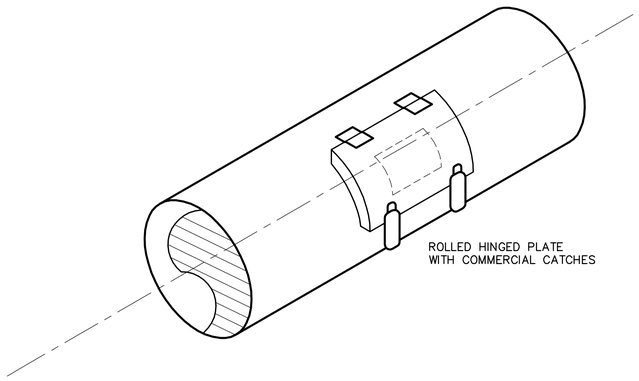

5 M7.05 ACCESS DOOR – ROUND DUCT
SCALE N.T.S.

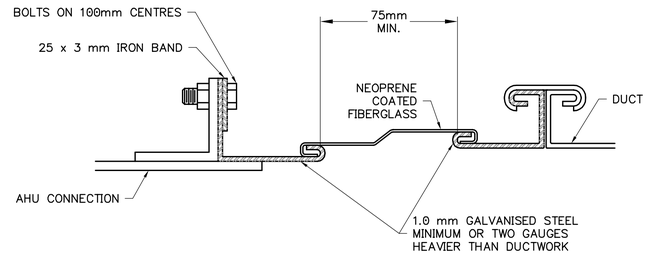

6 M7.05 FLEXIBLE DUCT FAN CONNECTION DETAIL
SCALE N.T.S.

APEGM
Certificate of Authorization
Earth Tech Canada Inc.
No. 730 Expiry: April 30, 2005

B.M.
ELEV.

NO.	REVISIONS	DATE	BY
0	ISSUED FOR TENDER	05/02/18	JEH

EARTH TECH
Earth Tech (Canada) Inc. Winnipeg, Manitoba 204.477.5381

DESIGNED BY	PL	CHECKED BY	AMA
DRAWN BY	DL	APPROVED BY	DT
HOR. SCALE:	AS NOTED	RELEASED FOR CONSTRUCTION BY:	T. KJARTANSON
VERTICAL SCALE:	AS NOTED		
DATE	2005/01/04	DATE	2005–02–18

ENGINEER'S SEAL
ORIGINAL SIGNED BY
P.V. LAITINEN
FEB. 18/05

CONSULTANT DRAWING NO.
66303D–CM7.05

Winnipeg
THE CITY OF WINNIPEG
WATER AND WASTE DEPARTMENT

NEWPCC – SECONDARY EFFLUENT
UV DISINFECTION FACILITY

MECHANICAL
VENTILATION DETAILS
SHEET 2 OF 2

CITY FILE NUMBER
SHEET 14 OF 18
CITY DRAWING NUMBER

SHEET: CVW-A1-WWD (11/2002)