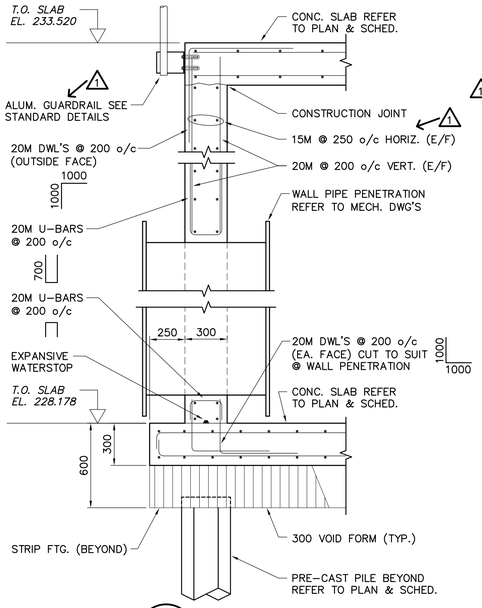

A S3.01 DETAIL 1:20

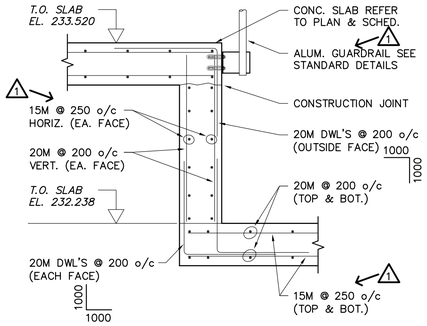

B S3.01 DETAIL 1:20

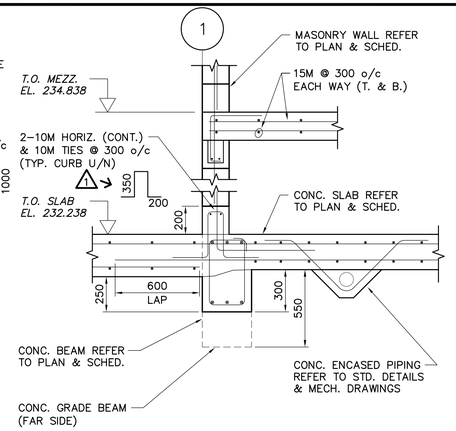

C S3.01 DETAIL 1:20

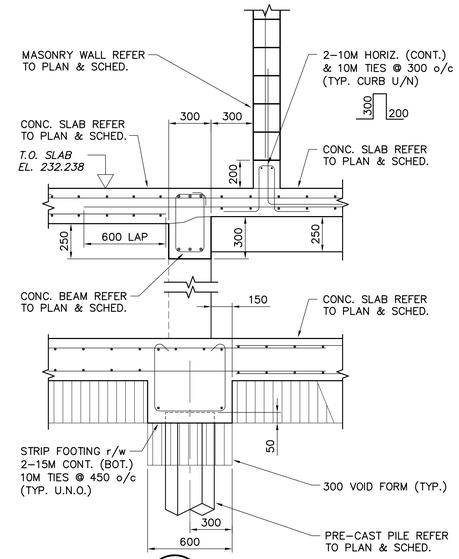

D S3.01 DETAIL 1:20

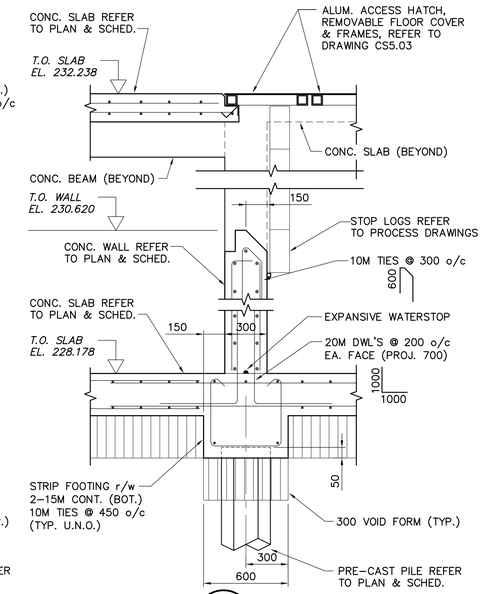

E S3.01 DETAIL 1:20

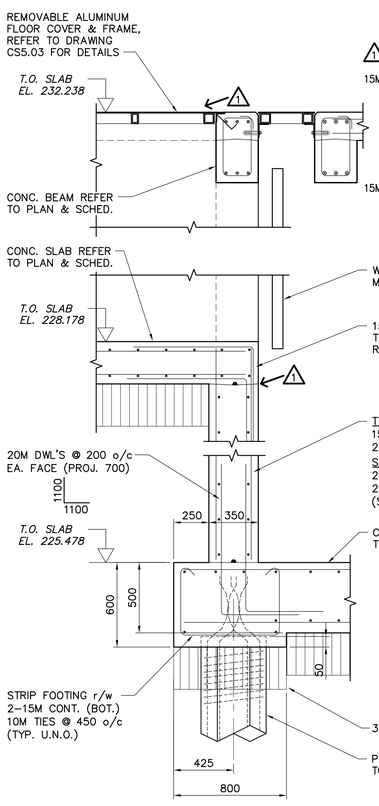

F S3.01 DETAIL 1:20

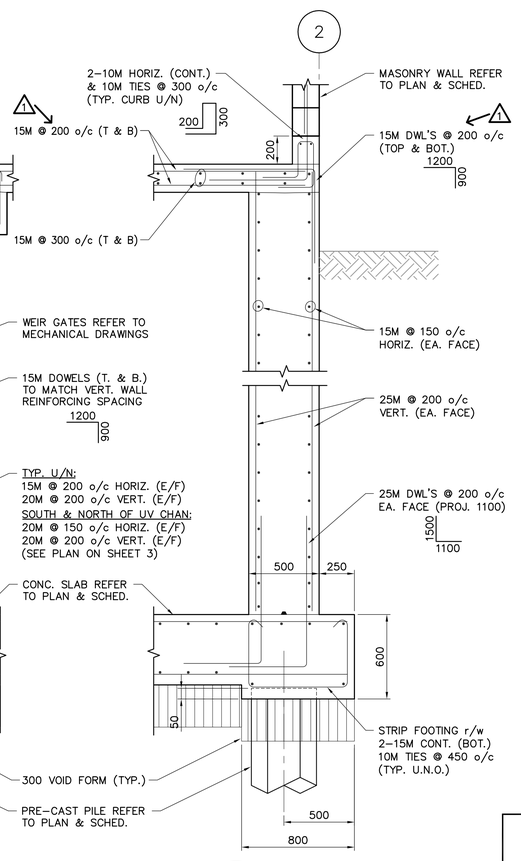

G S3.01 DETAIL 1:20

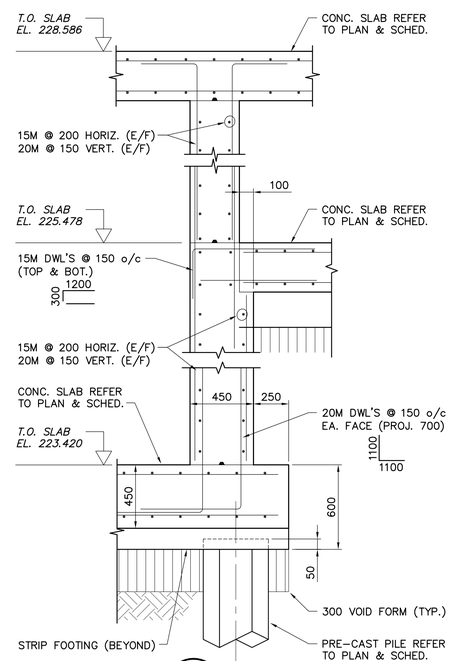

H S3.01 DETAIL 1:20

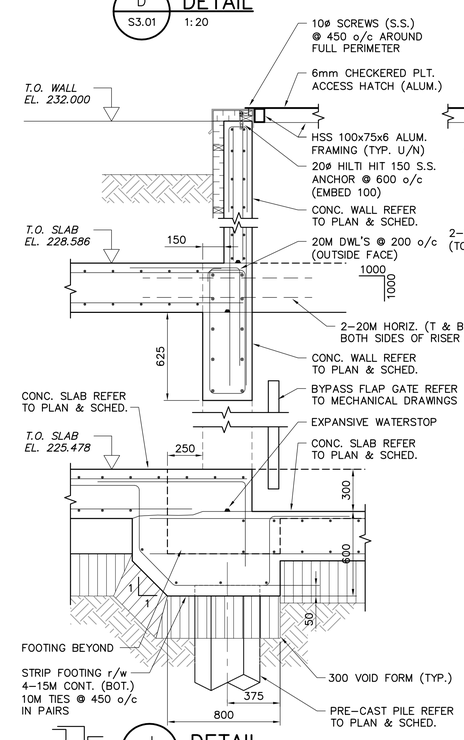

J S3.01 DETAIL 1:20

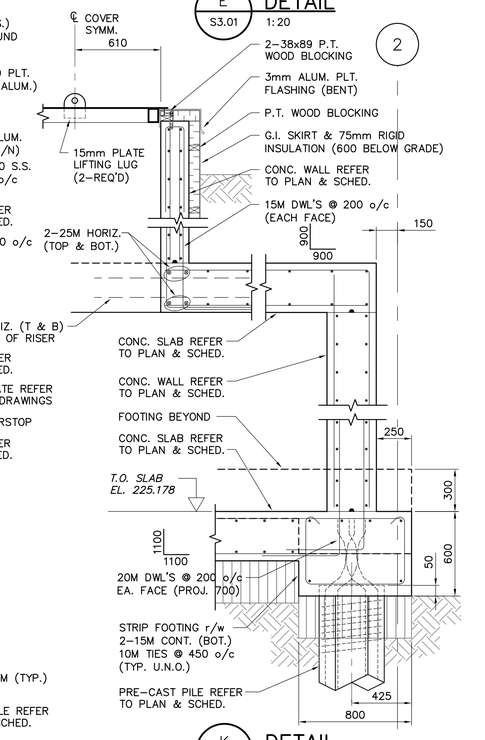

K S3.01 DETAIL 1:20

APEGM
Certificate of Authorization
Earth Tech Canada Inc.
No. 730 Expiry: April 30, 2005

NO.	REVISIONS	DATE	BY
1	ISSUED FOR ADDENDUM 1	05/03/04	JEH
0	ISSUED FOR TENDER	05/02/18	JEH

B.M. ELEV.

EARTH TECH
Earth Tech (Canada) Inc. Winnipeg, Manitoba 204.477.5381

DESIGNED BY	RE, MK	CHECKED BY	GGP
DRAWN BY	CMS	APPROVED BY	DT
HOR. SCALE:	AS NOTED	RELEASED FOR CONSTRUCTION BY:	T. KJARTANSON
VERTICAL SCALE:	AS NOTED		
DATE	2005/01/05	DATE	2005-02-18

ENGINEER'S SEAL
ORIGINAL SIGNED BY
R.B. ERIC
FEB. 18/05

CONSULTANT DRAWING NO.
66303D-CS4.04

Winnipeg
THE CITY OF WINNIPEG
WATER AND WASTE DEPARTMENT

NEWPCC - SECONDARY EFFLUENT UV DISINFECTION FACILITY

STRUCTURAL
SECTIONS AND DETAILS
SHEET 1 OF 4

CITY FILE NUMBER
SHEET 12 OF 19
CITY DRAWING NUMBER

Mar 15, 2005 - 12:44pm PLOTTED BY: ding.chan LAYOUT:Layout1 FILE:L:\work\66000\66303D\s\02s-CAD\ALL\SUBMISSION\ADDENDUM#XX\ADDENDUM#01\ND\CS4-04.dwg