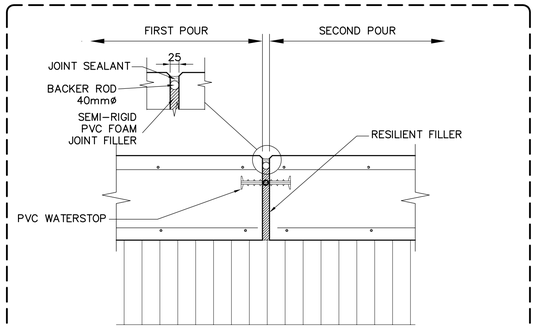

FLOOR EXPANSION JOINT TYP.

SCALE N.T.S.

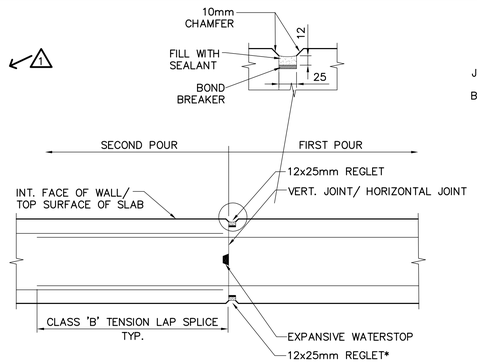

TYPICAL CONSTRUCTION JOINT

SCALE N.T.S.

*NOT APPLICABLE FOR FLOOR SLABS

REINFORCING IN PERPENDICULAR DIRECTION NOT SHOWN.
REFER TO SPECIFIC SECTION FOR REINFORCING DETAILS.

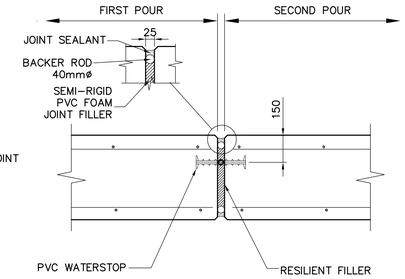

WALL EXPANSION JOINT TYP.

SCALE N.T.S.

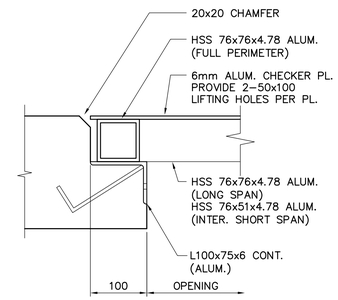

NOTE:
REMAINDER AS PER TYPICAL ALUMINUM BOLTED COVER & FRAME DETAIL

1/S5.03 TOP SEAT ALUMINUM HSS FRAMED COVER & FRAME DETAIL

SCALE N.T.S.

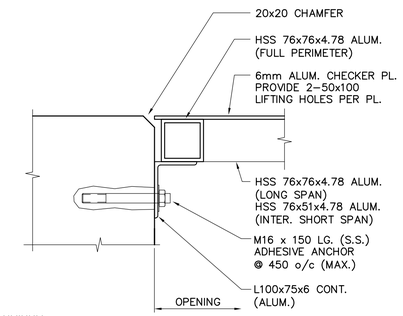

2/S5.03 SIDE SEAT ALUMINUM HSS FRAMED COVER & FRAME DETAIL

SCALE N.T.S.

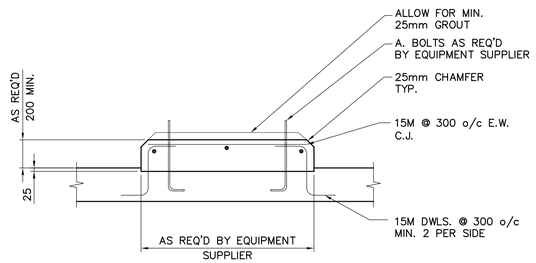

HOUSE KEEPING PADS FOR EQUIPMENT ON STRUCTURAL SLAB

SCALE N.T.S.

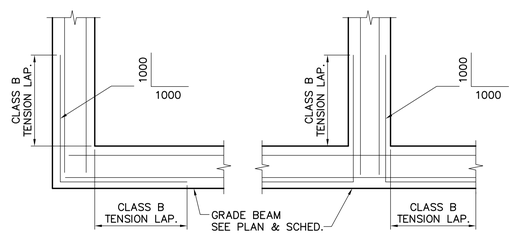

TYPICAL GRADE BEAM CORNER REINFORCING

SCALE N.T.S.
CORNER BARS SAME SIZE AND SPACING AS HORIZONTAL REINFORCING

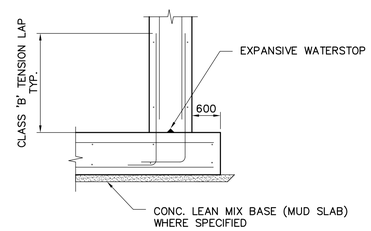

STANDARD JOINT CONSTRUCTION JOINT FOR WATER RETAINING WALL TO BASE SLAB

SCALE N.T.S.

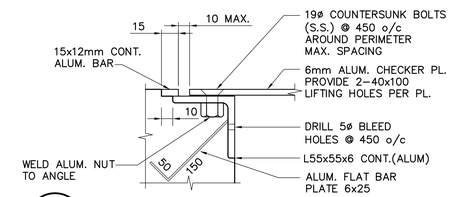

3/S5.03 TOP SEAT TYPICAL ALUMINUM BOLTED COVER & FRAME DETAIL

SCALE N.T.S.

REFER TO GENERAL NOTES FOR DESIGN LIVE LOADS ON COVERS.

PAINT ALL ALUMINUM SURFACES IN CONTACT WITH CONCRETE WITH TWO COATS OF ALKALI-RESISTANT BITUMINOUS PAINT.

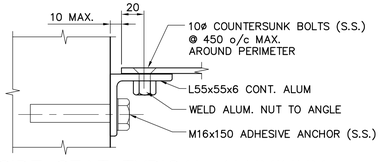

4/S5.03 SIDE SEAT TYPICAL ALUMINUM BOLTED COVER & FRAME DETAIL

SCALE N.T.S.

REFER TO GENERAL NOTES FOR DESIGN LIVE LOADS ON COVERS.

PAINT ALL ALUMINUM SURFACES IN CONTACT WITH CONCRETE WITH TWO COATS OF ALKALI-RESISTANT BITUMINOUS PAINT.

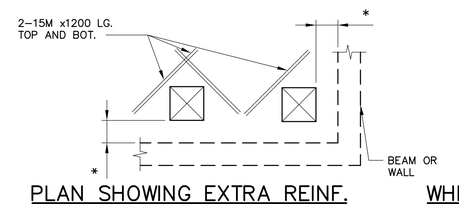

PLAN SHOWING EXTRA REINF. AROUND OPENING 150 TO 280

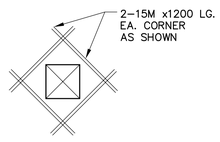

WHEN OPENING IS MORE THAN 300 FROM BEAM OR WALL

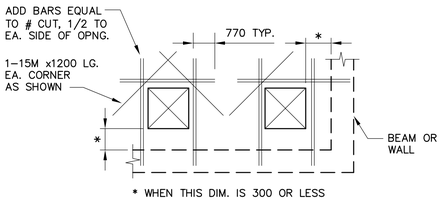

* WHEN THIS DIM. IS 300 OR LESS

PLAN SHOWING EXTRA REINF. AROUND OPENING 300 TO 760

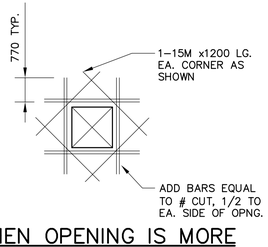

WHEN OPENING IS MORE THAN 300 FROM BEAM OR WALL

TYPICAL REINFORCING AROUND OPENINGS IN CONCRETE SLAB OR WALL

SCALE N.T.S.

1. NUMBER OF REINFORCING BARS TO BE CUT AT OPENING TO BE KEPT AT A MINIMUM. DEFLECT AS MANY BARS AS POSSIBLE AROUND OPENING.
2. REINFORCING BARS TO BE KEPT MINIMUM 50 CLEAR OF OPENING.
3. CIRCULAR OPENINGS TO BE TREATED IN SAME MANNER AS RECTANGULAR UNLESS OTHERWISE DETAILED.

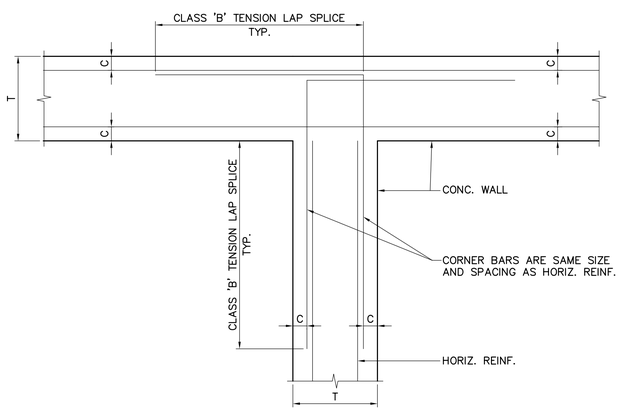

TYPICAL REINFORCING FOR WALL INTERSECTION

SCALE N.T.S.
VERTICAL REINFORCING NOT SHOWN. REFER TO SPECIFIC SECTION FOR REINFORCING DETAILS.
C = CONC. COVER AS SPECIFIED
T = REFER TO SCHED.

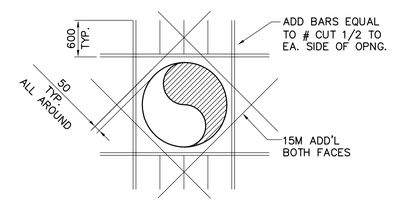

EXTRA REINFORCING AROUND PIPE UP TO 1250ø MAX. CAST IN WALL OR FLOOR SLAB

SCALE N.T.S.

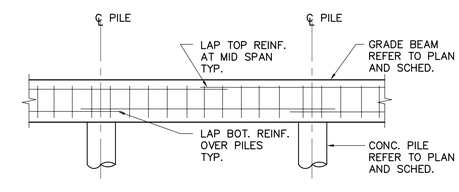

GRADE BEAM SPLICE DETAIL

SCALE N.T.S.

APEGM
Certificate of Authorization
Earth Tech Canada Inc.
No. 730 Expiry: April 30, 2005

NO.	REVISIONS	DATE	BY
1	ISSUED FOR ADDENDUM 1	05/03/04	JEH
0	ISSUED FOR TENDER	05/02/18	JEH

B.M.
ELEV.

EARTH TECH
Earth Tech (Canada) Inc. Winnipeg, Manitoba 204.477.5381

DESIGNED BY RE, MK	CHECKED BY GGP
DRAWN BY C.T.	APPROVED BY DT
HOR. SCALE: AS NOTED VERTICAL SCALE: AS NOTED	RELEASED FOR CONSTRUCTION BY: T. KJARTANSON
DATE 2004/11/04	DATE 2005-02-18

ENGINEER'S SEAL
ORIGINAL SIGNED BY
R.B. ERIC
FEB. 18/05

CONSULTANT DRAWING NO.
66303D-CS4.01

THE CITY OF WINNIPEG
Winnipeg WATER AND WASTE DEPARTMENT

NEWPCC - SECONDARY EFFLUENT UV DISINFECTION FACILITY

STRUCTURAL DETAILS

CITY FILE NUMBER

SHEET 9 OF 19

CITY DRAWING NUMBER

SHEET: Cute-A1-WND (11/2002)