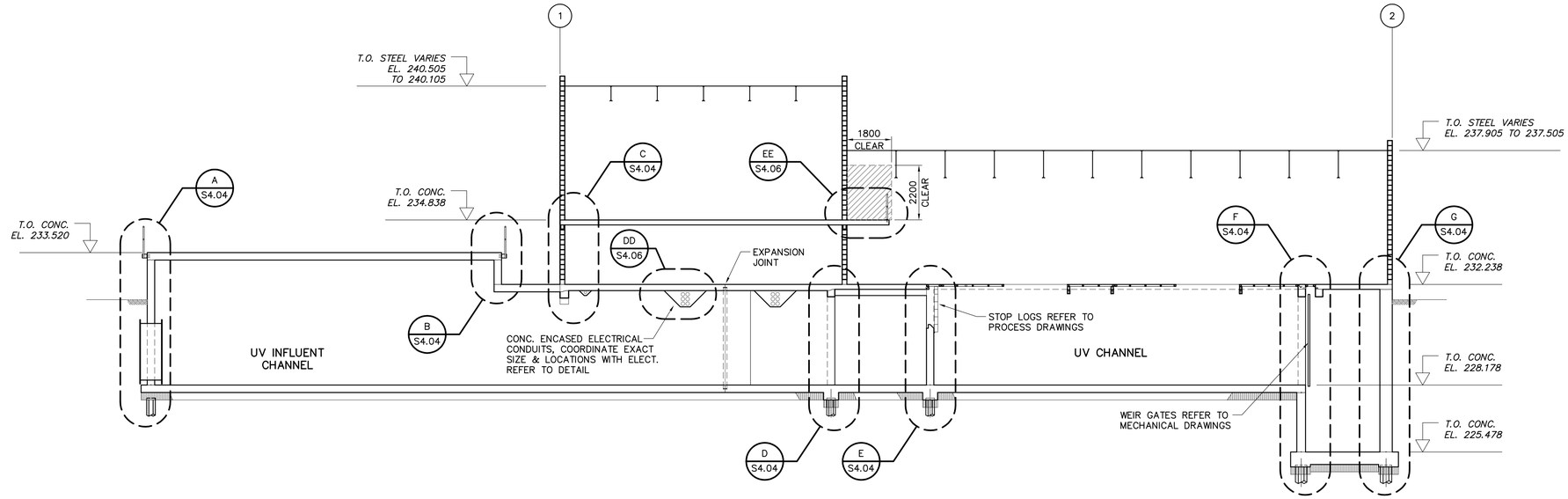


1 S2.02 SECTION
SCALE 1:100

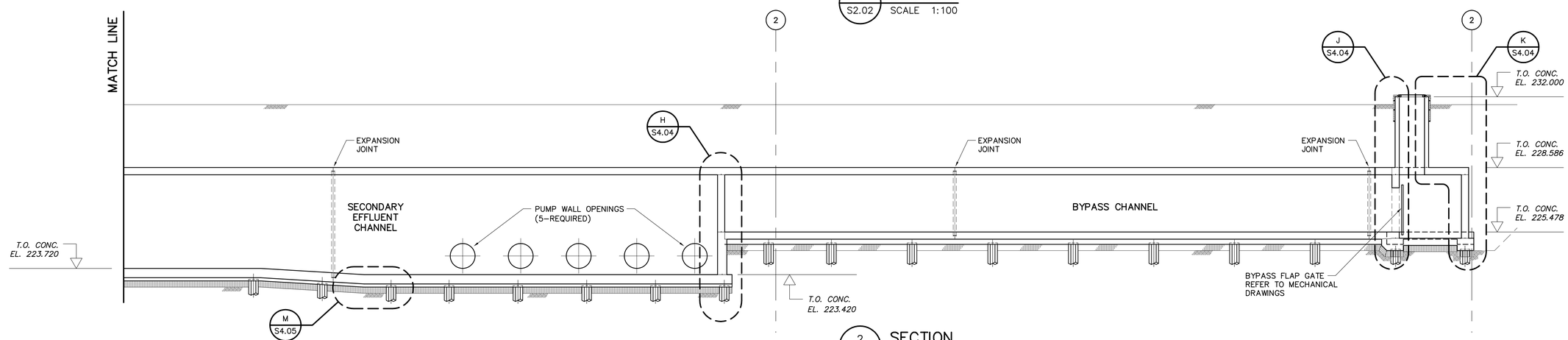


2 S2.02 SECTION
SCALE 1:100

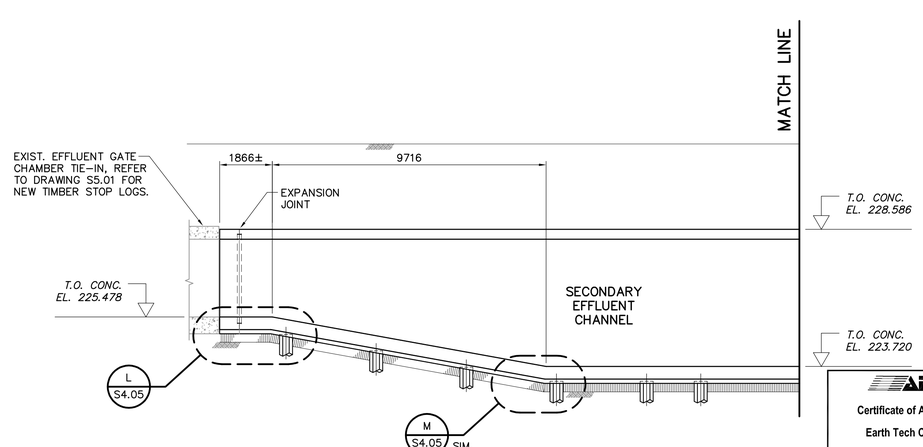


APEGM
Certificate of Authorization
Earth Tech Canada Inc.
No. 730 Expiry: April 30, 2005

| NO. | REVISIONS | DATE | BY |
|---|---|---|---|
| 1 | ISSUED FOR ADDENDUM 1 | 05/03/04 | JEH |
| 0 | ISSUED FOR TENDER | 05/02/18 | JEH |

B.M.
ELEV.

EARTH TECH
Earth Tech (Canada) Inc. Winnipeg, Manitoba 204.477.5381

| | | | |
|---|---|---|---|
| DESIGNED BY | RE, MK | CHECKED BY | GGP |
| DRAWN BY | C.T. | APPROVED BY | DT |
| HOR. SCALE: | AS NOTED | RELEASED FOR CONSTRUCTION BY: | T. KJARTANSON |
| VERTICAL SCALE: | AS NOTED | | |
| DATE | 2004/11/04 | DATE | 2005-02-18 |

ENGINEER'S SEAL
ORIGINAL SIGNED BY
R.B. ERIC
FEB. 18/05

CONSULTANT DRAWING NO.
66303D-CS3.01

Winnipeg
THE CITY OF WINNIPEG
WATER AND WASTE DEPARTMENT

NEWPCC - SECONDARY EFFLUENT
UV DISINFECTION FACILITY

STRUCTURAL
BUILDING SECTIONS

CITY FILE NUMBER
SHEET 7 OF 19
CITY DRAWING NUMBER

SHEET: Cute-A1-WND (V1/2002)

Mar 15, 2005 - 12:38pm PLOTTED BY: ding.chan LAYOUT:Layout1 FILE:L:\work\66000\66303dis\02a-CAD\ALL\SUBMISSION\ADDENDUM#XX\ADDENDUM#01\IND\CS3-01.dwg