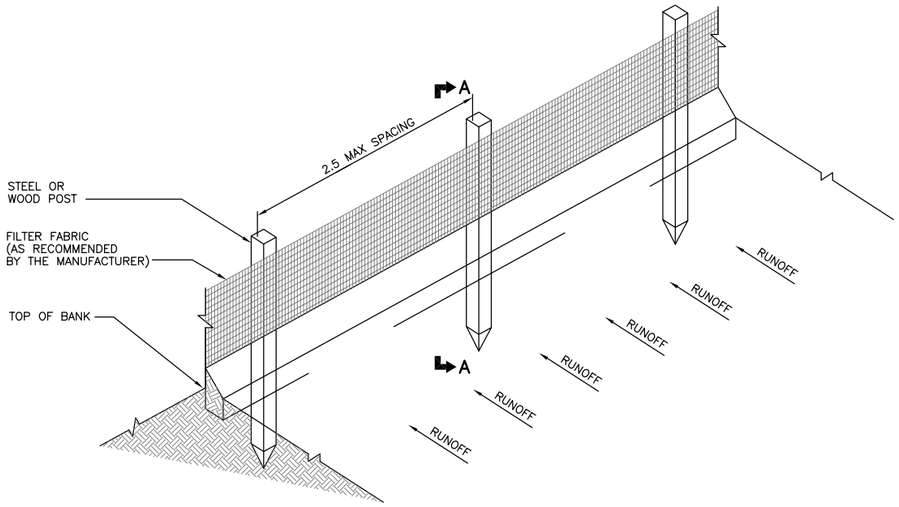

ISOMETRIC DETAIL
SCALE: NTS

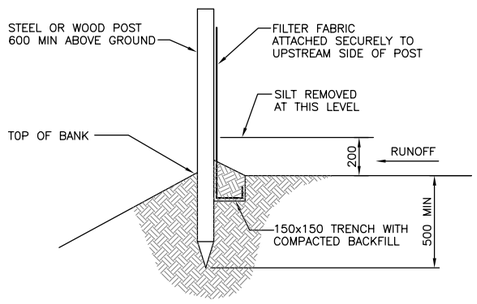

SECTION A–A
TRENCH WITH NATIVE BACKFILL
SCALE: NTS

SILT FENCE DETAILS
SCALE: NTS

NOTE:

SILT FENCE PLACED WHERE SHOWN
ON THE DRAWING TO MAXIMIZE PONDING EFFICIENCY,
AND PREVENT SEDIMENT FROM ENTERING TREED AREAS
OF THE RIVER.

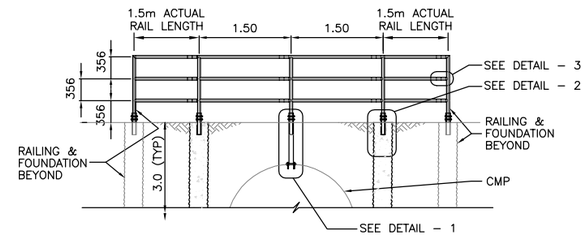

HANDRAIL ELEVATION
SCALE: 1:50

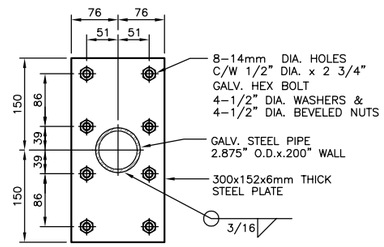

SECTION A–A
SCALE: 1:5

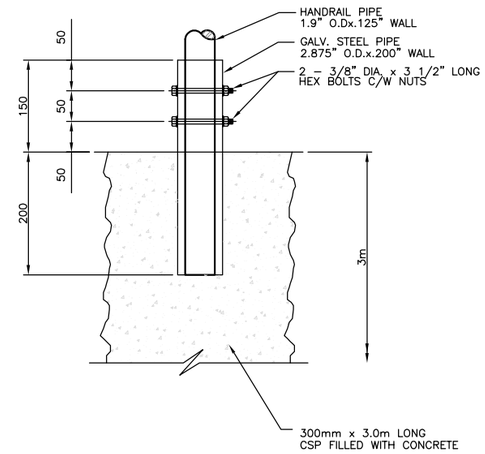

2 DETAIL
SCALE: 1:5

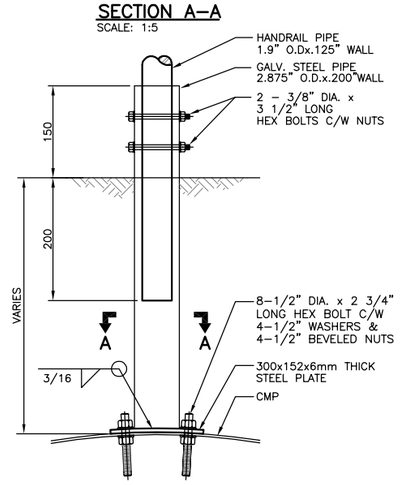

1 DETAIL
SCALE: 1:5

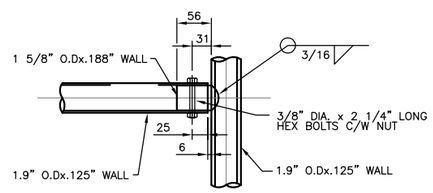

3 DETAIL
SCALE: 1:5

METRIC
WHOLE NUMBERS INDICATE MILLIMETRES
DECIMALIZED NUMBERS INDICATE METRES

APEGM
Certificate of Authorization
KGS Group
No. 245 Expiry: April 30, 2006

LOCATION APPROVED
UNDERGROUND STRUCTURES

SUPV. U/G STRUCTURES COMMITTEE — DATE

NOTE:
LOCATION OF UNDERGROUND STRUCTURES AS SHOWN ARE BASED ON THE BEST INFORMATION AVAILABLE BUT NO GUARANTEE IS GIVEN THAT ALL EXISTING UTILITIES ARE SHOWN OR THAT THE GIVEN LOCATIONS ARE EXACT. CONFIRMATION OF EXISTENCE AND EXACT LOCATION OF ALL SERVICES MUST BE OBTAINED FROM THE INDIVIDUAL UTILITIES BEFORE PROCEEDING WITH CONSTRUCTION.

B.M.
ELEV.

NO.	REVISIONS	DATE	BY
0	ISSUED FOR CONSTRUCTION	05/12/07	RJH

KGS GROUP — CONSULTING ENGINEERS & PROJECT MANAGERS
WINNIPEG (204) 896–1209
THUNDER BAY (807) 345–2233

DESIGNED BY	RJH	CHECKED BY	RJH
DRAWN BY	DW	APPROVED BY	
HOR. SCALE: VERTICAL:	AS NOTED	RELEASED FOR CONSTRUCTION:	
DATE	05/10/25	DATE	

ENGINEER'S SEAL
ORIGINAL SIGNED BY R.J. HOUSTON 05/12/07

CONSULTANT DRAWING NO.
05–107–13_03

Winnipeg
THE CITY OF WINNIPEG
WATER & WASTE DEPARTMENT

HAWTHORNE FLOOD PUMPING STATION UPGRADE

SILT FENCE DETAILS

SHEET 03 OF 24
CAD FILE DRAWING NUMBER 05–107–13_03
CITY DRAWING NUMBER LD–3240

COWLEGEND