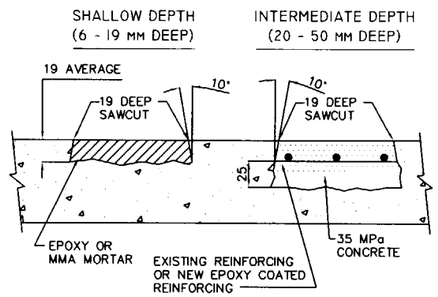

DECK REPAIR DETAILS

N.T.S.

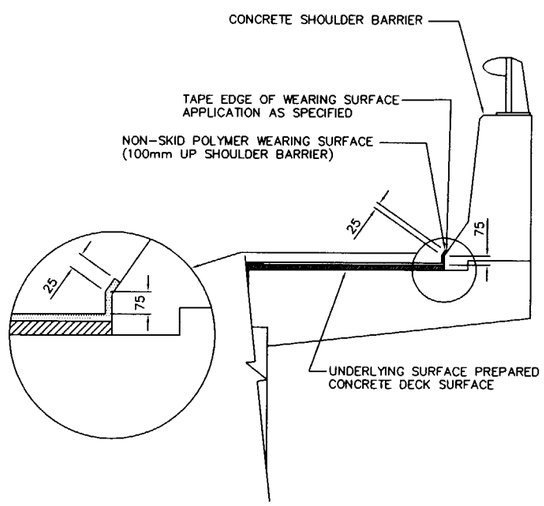

TRAFFIC BARRIER DETAIL (TYPICAL)

N.T.S.

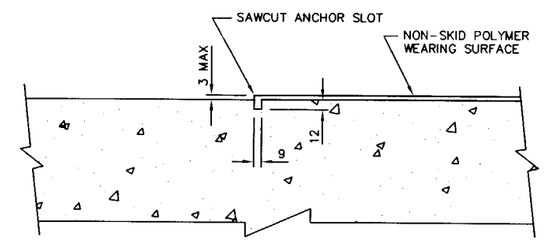

TYPICAL ANCHOR DETAIL

N.T.S.

B.M. ELEV.				DESIGNED BY M.R.T.	ENGINEER'S SEAL	THE CITY OF WINNIPEG PUBLIC WORKS DEPARTMENT ENGINEERING DIVISION	
				DRAWN BY M.R.T.	PROVINCE OF MANITOBA B.A.J. NEIRINCK REGISTERED PROFESSIONAL ENGINEER	NAIRN AVENUE OVERPASS EASTBOUND CONCRETE BRIDGE DECK SURFACE SEALING	SHEET 2 OF 2
				CHECKED BY B.A.N.			HOR. SCALE: VERTICAL: N.T.S.
				APPROVED BY B.A.N.			
NO.	REVISIONS	DATE	BY	AUTHORIZED BY: B. A. NEIRINCK BRIDGE PLANNING & OPERATIONS ENGINEER — DATE	BID OPPORTUNITY NO.: 458 – 2005	WEARING SURFACE DETAILS	CITY DRAWING NUMBER B121-05-02

Revision April, 1999