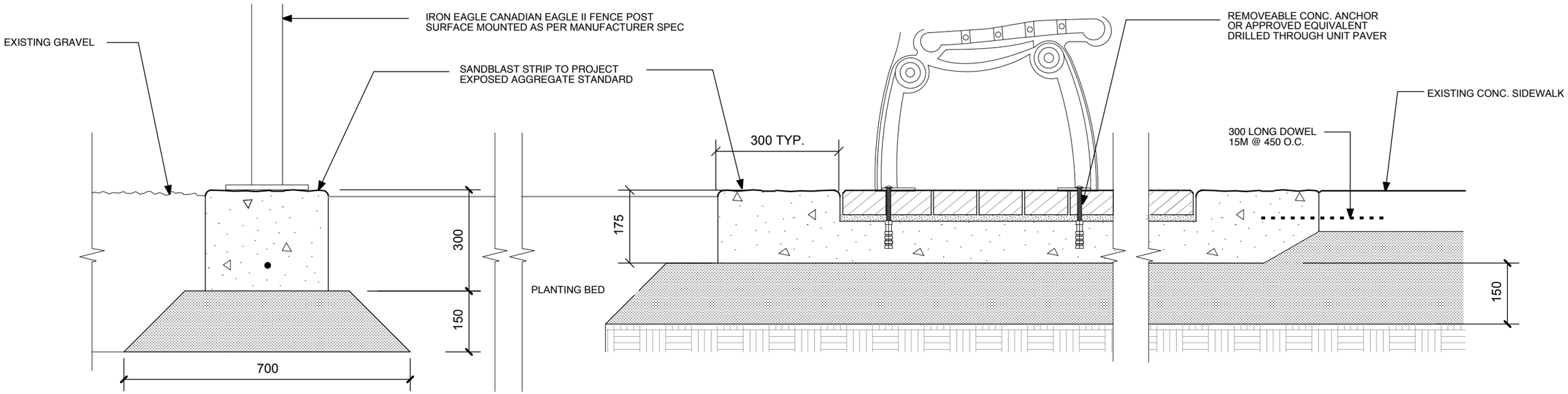

1
L28

SECTION THROUGH PAVING AREA

1:10

NO.	REVISIONS	DATE	BY
	B.M. ELEV.	YY.MM.DD	
3	ISSUED FOR TENDER	05.08.05	
2	ISSUED FOR REVIEW	05.07.20	
1	ISSUED FOR REVIEW	05.06.02	

HILDERMAN THOMAS FRANK CRAMB
Landscape Architecture • Planning
500 - 115 Bannatyne Avenue East, Winnipeg, MB R3B 0R3
Phone: 204.944.9907 Fax: 204.957.1467

DESIGNED: RGM/RC | DRAWN: MB
SCALE: AS NOTED | APPROVED: RGM
DATE 2005.08.12

the manitoba association of landscape architects
Glen Manning
Member No. 81

CONSULTANT DRAWING NO.
04-033-L28

Winnipeg
THE CITY OF WINNIPEG
PUBLIC WORKS DEPARTMENT
ENGINEERING DIVISION

WESTMINSTER AVENUE / WOLSELEY AVENUE
STREETSCAPE IMPROVEMENTS

CITY DRAWING NUMBER
452-2005

SHEET 28 OF 28

DETAILS FOR PRIVATE SPACES

L28

DATE PLOTTED: 8/17/05