TITLE

TACHE STYLE
METAL FRAME PICNIC TABLE

SCD-130

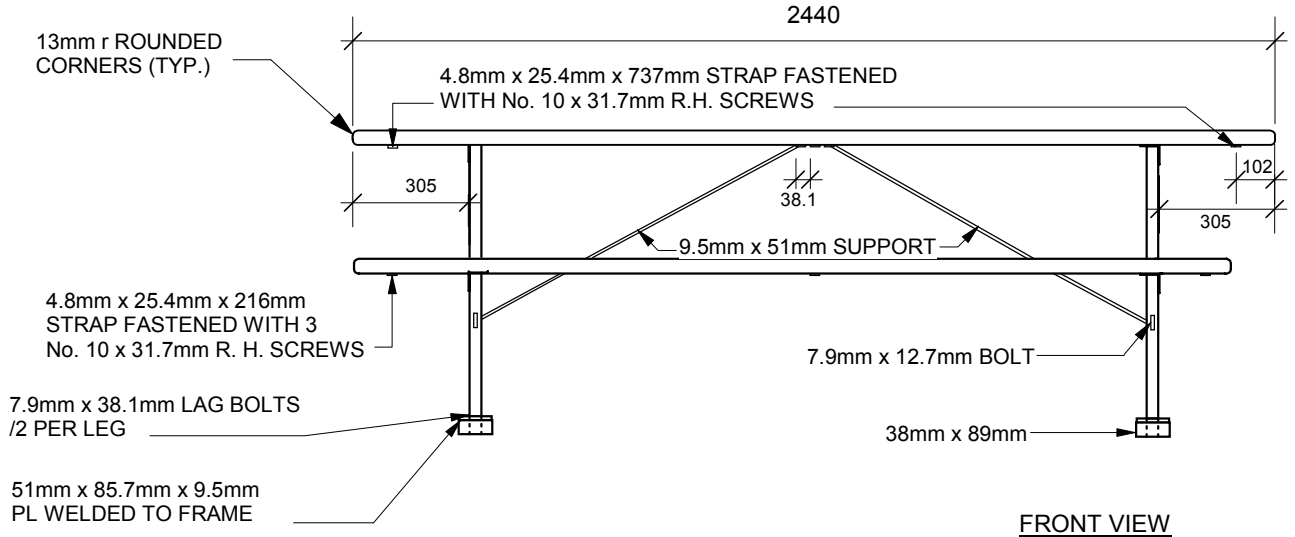

FRONT VIEW

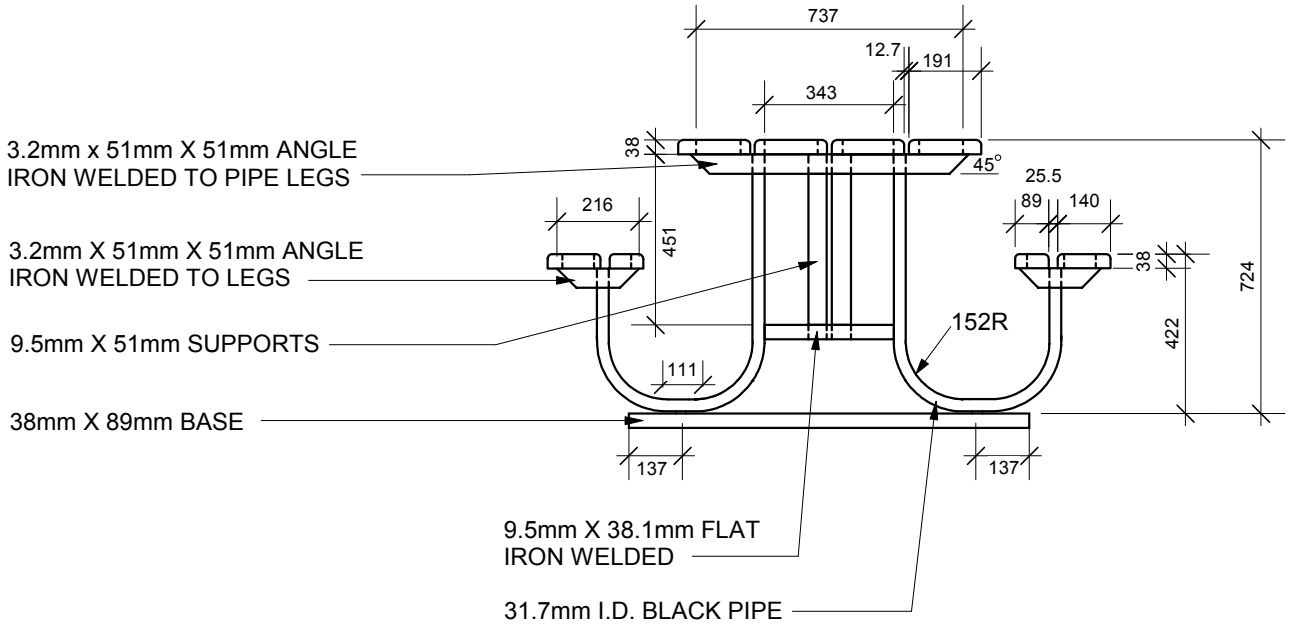

END VIEW

MATERIALS:
WOOD - VERTICAL GRAIN CLEAR SITCA SPRUCE OR B.C. RED CEDAR.
FINISH - SIKKENS CETOL No. 078 NATURAL
METAL - PRIME WITH RUSTOLEUM No. 769. FINISH WITH SAPOLIN BLACK WROUGHT FINISH.

NOTE:
ALL WOOD TO BE FASTENED TO ANGLE IRONS WITH 7.9mm X 38.1mm LAG BOLTS.

ALL DIMENSIONS SHOWN ARE IN MILLEMETERS.

DRAWN SV
DATE JULY/02
NOT TO SCALE

THE CITY OF WINNIPEG
Planning,Property and Development Department
Planning and Land Use Division
Unit 15 - 10 Fort Street, Winnipeg, MB, R3C 4X5

Winnipeg