SHEET: COW-A1 (03/2005)

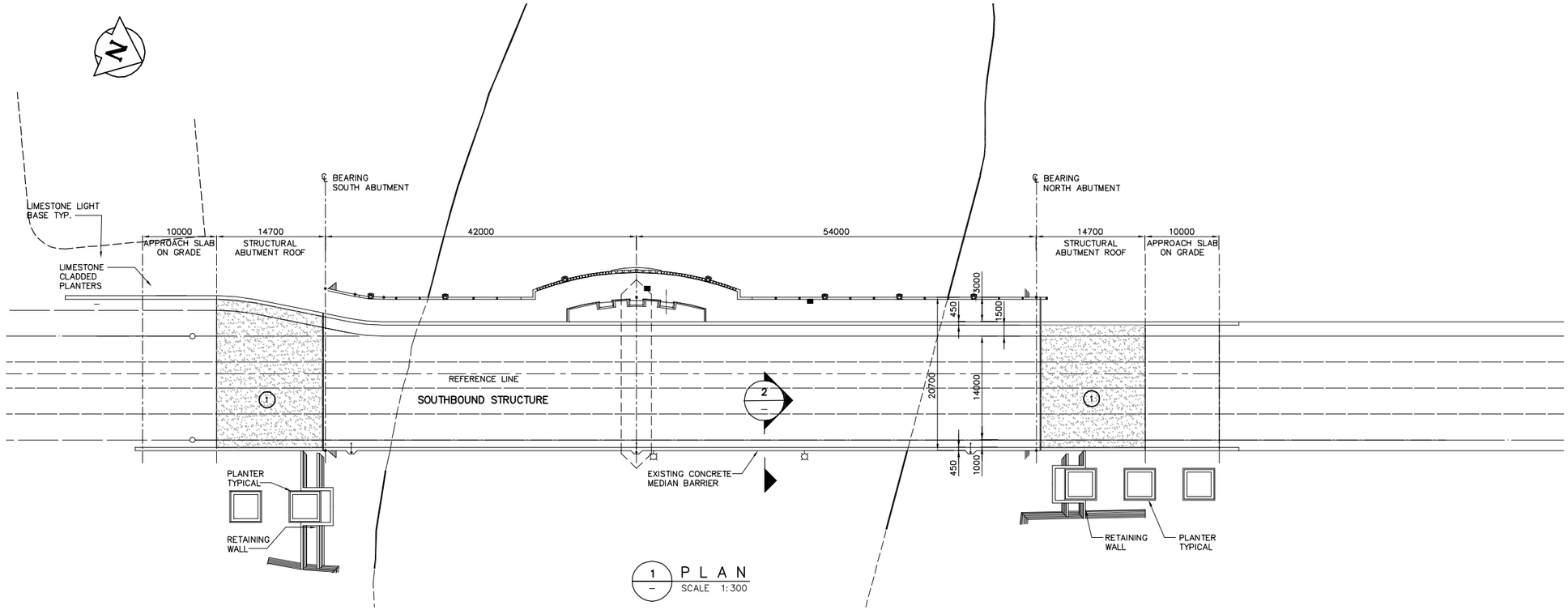

1 PLAN
SCALE 1:300

MAIN SOUTHBOUND BRIDGE WORKS	
1	NON-SKID POLYMER OVERLAY ON EXPOSED STRUCTURAL ABUTMENT ROOFS

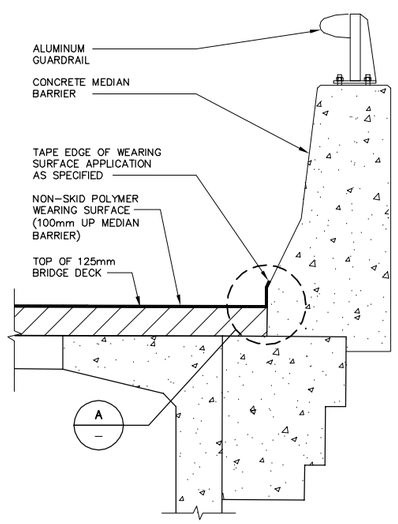

2 DETAIL-CAST-IN-PLACE TRAFFIC BARRIER (TYP. BOTH SIDES)
SCALE N.T.S.

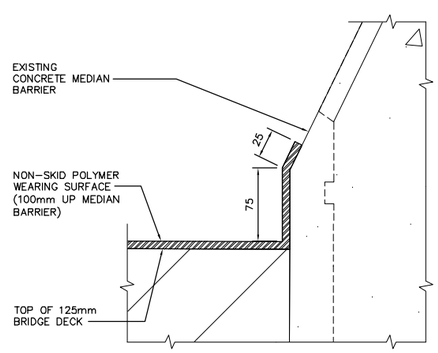

A DETAIL
SCALE N.T.S.

NO.	REVISIONS	DATE	BY
A	ISSUED FOR REVIEW	05/04/22	–

B.M. ELEV.

BID OPPORTUNITY No. 217-2005

EarthTech
A Tyco International Ltd. Company

DESIGNED BY JB	CHECKED BY JB
DRAWN BY JLI	APPROVED BY
HOR. SCALE: AS VERTICAL SCALE: SHOWN	RELEASED FOR CONSTRUCTION BY:
DATE 2005/04/12	DATE

ENGINEER'S SEAL

CONSULTANT DRAWING NO. CS04

THE CITY OF WINNIPEG
PUBLIC WORKS DEPARTMENT
ENGINEERING DIVISION

MAIN AND NORWOOD SOUTHBOUND BRIDGES DECK SEALING AND RELATED WORKS

BID OPPORTUNITY No. 217-2005

SHEET 4 OF 4

GENERAL ARRANGEMENT AND DETAILS OF PROPOSED WORKS MAIN STREET BRIDGE SOUTHBOUND

CITY DRAWING NUMBER B104-05-01

PRELIMINARY NOT FOR CONSTRUCTION

05/06/05 04:13pm john.ignacio L:\work\84000\84476\02a-CAD\TRA\issued for B.O. 05-06-05\CS04.dwg Layout:Layout1