AZON CANADA 3130110300

SEP 432 file # SU10239

REF. OR DRAWING NO. SEP 432

DETAILS

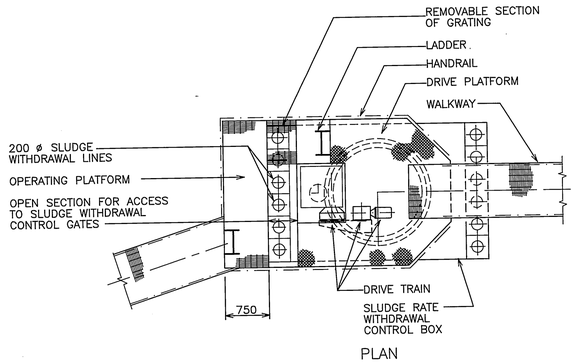

PLAN

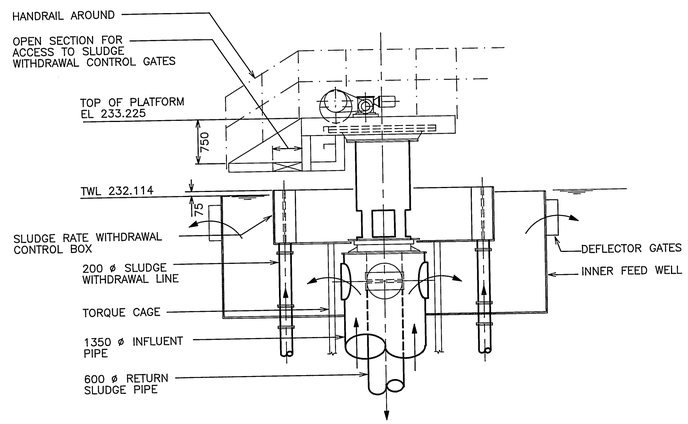

SECTION

DETAILS OF DRIVE PLATFORM
SCALE 1:50

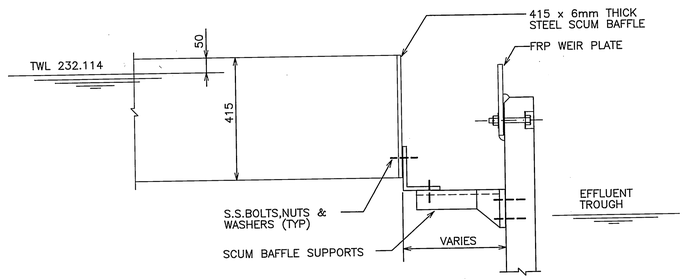

TYPICAL SCUM BAFFLE DETAILS
SCALE 1:10

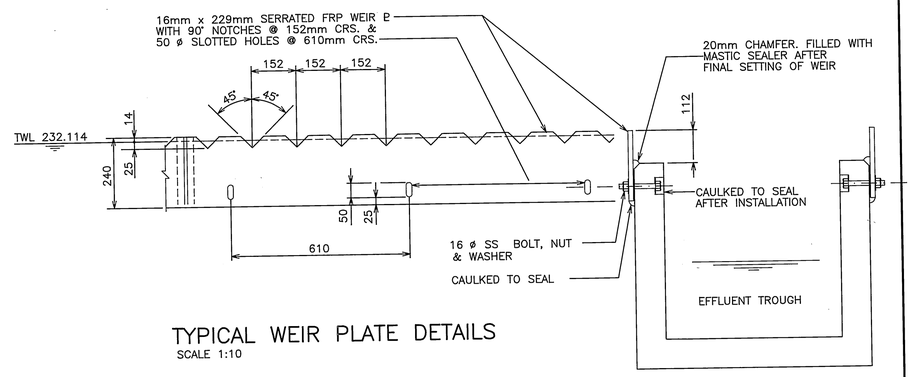

TYPICAL WEIR PLATE DETAILS
SCALE 1:10

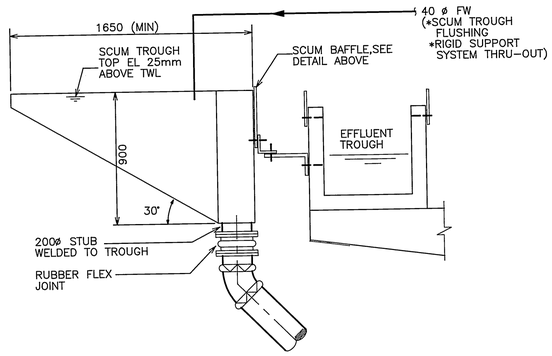

SCUM TROUGH DETAILS
SCALE 1:20

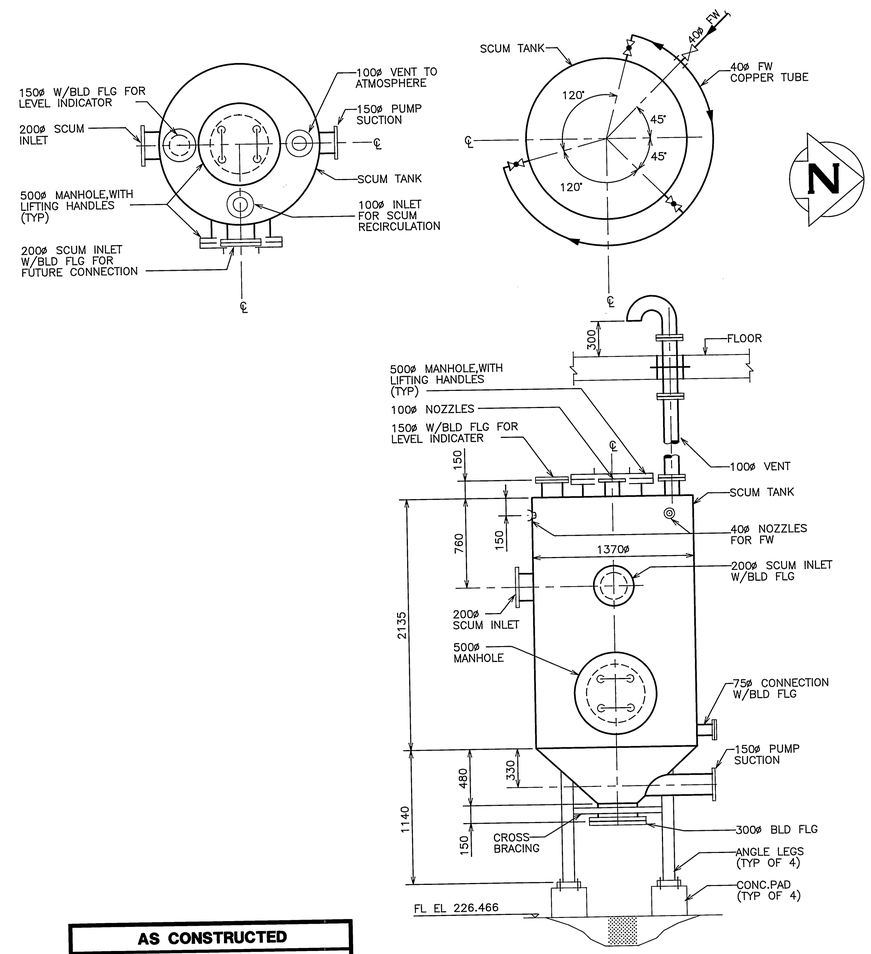

SCUM TANK DETAIL
SCALE 1:25

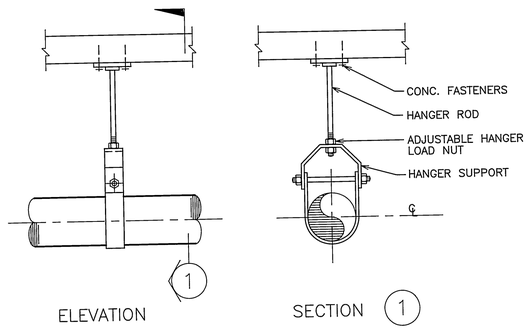

ELEVATION SECTION

TYPICAL CLEVIS HANGER
NTS

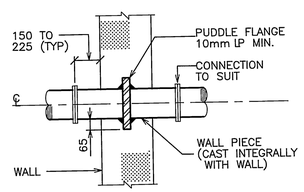

STEEL PIPE WALL PIECE TYPICAL DETAIL
NTS
(FOR NEW WATER BEARING WALLS)

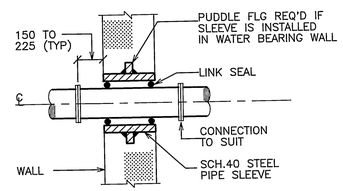

FLOOR OR WALL SLEEVE TYPICAL DETAIL
NTS
(FOR NEW FLOOR OR WALL)

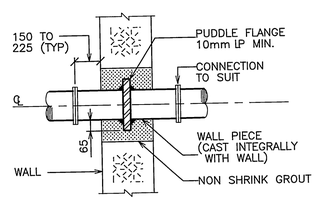

STEEL PIPE WALL PIECE TYPICAL DETAIL
NTS
(FOR EXISTING WATER BEARING WALLS)

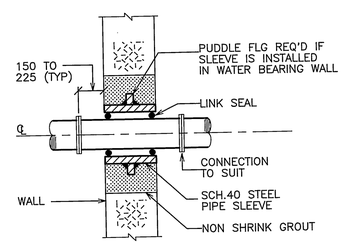

FLOOR OR WALL SLEEVE TYPICAL DETAIL
NTS
(FOR EXISTING FLOOR OR WALL)

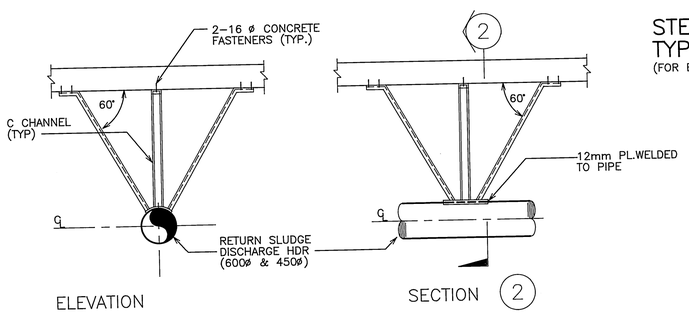

ELEVATION SECTION

PIPE THRUST SUPPORT DETAIL
NTS

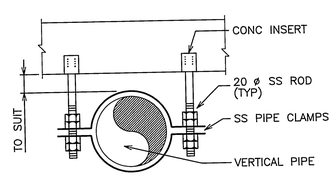

TYPICAL SUPPORT ON VERTICAL PIPE
NTS

AS CONSTRUCTED
DATE SEPTEMBER 1993 BY P.R.B.
APPROVED BY Sean Quigley

ORIGINALLY DESIGNED BY

NO.	REVISIONS	DATE	BY
1	AS CONSTRUCTED	09/93	P.R.B.
0	ISSUED FOR TENDER	07/90	RDJ

B.M. ELEV.

MacLAREN ENGINEERS INC.
WARDROP ENGINEERING INC.
ENGINEERING CONSULTANTS

DESIGNED BY CAS/RDJ
CHECKED BY RDJ
DRAWN BY TL
APPROVED BY
HOR. SCALE: / VERTICAL: AS SHOWN
RELEASED FOR CONSTRUCTION:
DATE

LICENSED PROFESSIONAL ENGINEER R. JUANEZA 9 Jul 93 PROVINCE OF ONTARIO

CONSULTANT DRAWING NO. 43525-24-S-M110

THE CITY OF WINNIPEG
WORKS AND OPERATIONS DIVISION
WATERWORKS, WASTE & DISPOSAL DEPARTMENT

SOUTH END WATER POLLUTION CONTROL CENTRE
SECONDARY CLARIFIER EXPANSION

MISCELLANEOUS DETAILS

CITY DRAWING NUMBER
SHEET OF
SEP-432

FILE # SU10239

AZON CANADA 3130110300