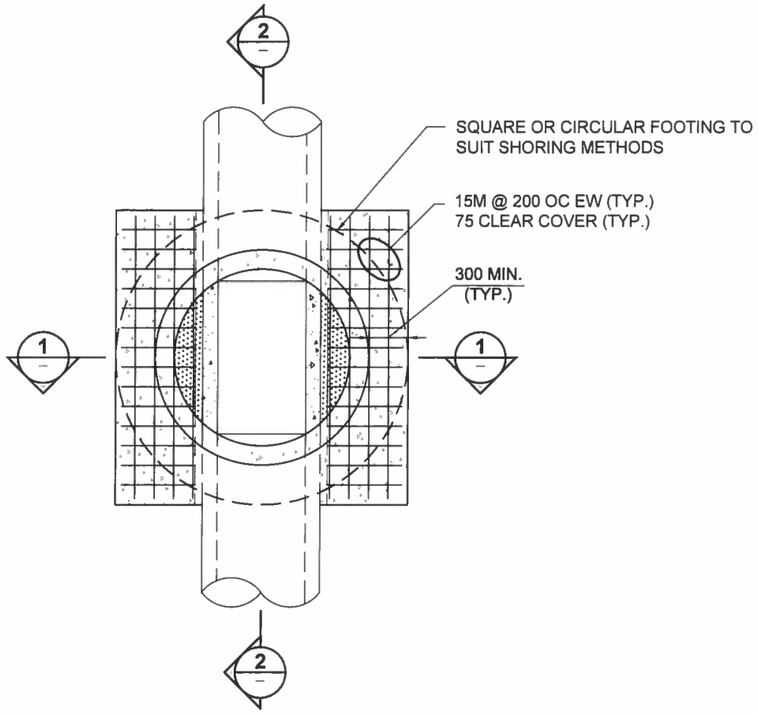

PLAN
Scale: NTS

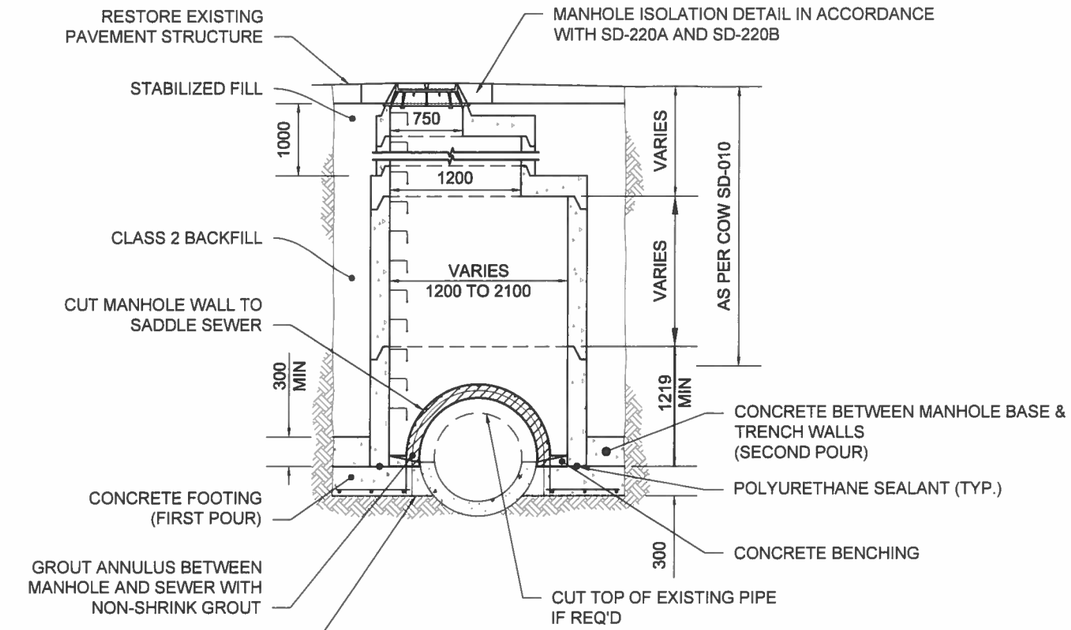

SECTION 1
Scale: NTS

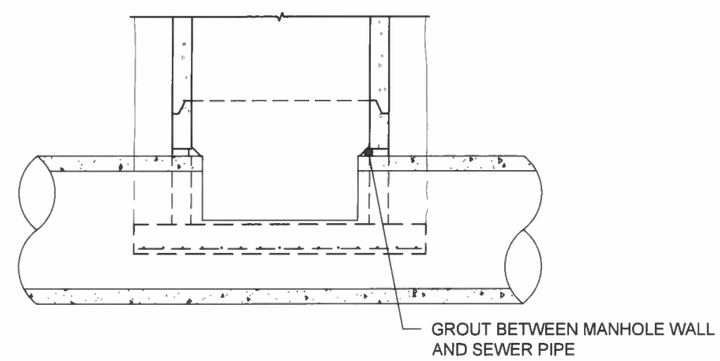

SECTION 2
Scale: NTS

WARNING

IF POWER EQUIPMENT OR EXPLOSIVES ARE TO BE USED FOR EXCAVATION ON THIS PROJECT, THE CONTRACTOR MUST:
1) NOTIFY THE GAS COMPANY OF THE PROPOSED LOCATION OF EXCAVATION.
2) TAKE PRECAUTION TO AVOID DAMAGE TO GAS COMPANY INSTALLATIONS.
SEE PROVINCIAL REGULATION 140/92 FOR DETAILS

ENGINEERS GEOSCIENTISTS MANITOBA
Certificate of Authorization
AECOM Canada Ltd.
No. 4671 Date: Nov 27/19

METRIC
WHOLE NUMBERS INDICATE MILLIMETRES
DECIMALIZED NUMBERS INDICATE METRES

BID OPPORTUNITY NO. 481-2019

AECOM REVIEW | DRFT CHK

SAVED BY: cooperkl

FILE NAME: C-5001

LOCATION APPROVED
UNDERGROUND STRUCTURES

SUPR. U/G STRUCTURES COMMITTEE — DATE

NOTE:
LOCATION OF UNDERGROUND STRUCTURES AS SHOWN ARE BASED ON THE BEST INFORMATION AVAILABLE. BUT NO GUARANTEE IS GIVEN THAT ALL EXISTING UTILITIES ARE SHOWN OR THAT THE GIVEN LOCATIONS ARE EXACT. CONFIRMATION OF EXISTENCE AND EXACT LOCATION OF ALL SERVICES MUST BE OBTAINED FROM THE INDIVIDUAL UTILITIES BEFORE PROCEEDING WITH CONSTRUCTION.

NO.	REVISIONS	YY/MM/DD	BY
0	ISSUED FOR CONSTRUCTION	19/11/28	KLC

AECOM

DESIGNED BY	TB	CHECKED BY	AB
DRAWN BY	KLC	APPROVED BY	
HOR. SCALE / VERT. SCALE	AS NOTED / N/A	RELEASED FOR CONSTRUCTION	
DATE		DATE	Nov. 28/19

PROFESSIONAL'S SEAL
PROVINCE OF MANITOBA — A. D. BRAUN Member 24458 — REGISTERED PROFESSIONAL ENGINEER — Nov 27

CONSULTANT DRAWING NO.
60592047-SHT-30-0000-C-5D01

Winnipeg

THE CITY OF WINNIPEG
WATER AND WASTE DEPARTMENT

2018 SEWER RENEWALS BY CIPP LINING CONTRACT 2
STANDARD MANHOLE INSTALLATION ON SUTHERLAND AVENUE

SHEET 31 OF 32

CITY DRAWING NUMBER
12295 REV 0